Section 1: Introduction

On October 26, 1986, Congress passed the Commercial Motor Vehicle Safety Act of 1986. This law requires each State to meet the same minimum standards for commercial driver licensing. The standards require commercial motor vehicle drivers to get a Commercial Driver's License (CDL). You must have a CDL to operate any of the following Commercial Motor Vehicles (CMV's):

a) A single vehicle with a gross vehicle weight rating (GVWR) of more than 26,000 pounds.

b) A trailer with a GVWR of more than 10,000 pounds if the gross combination weight rating is more than 26,000 pounds.

c) A vehicle designed to transport more than 15 persons (including the driver).

d) Any size vehicle which requires hazardous materials placards.

(Your state may have additional definitions of CMV's.)

To get a CDL, you must pass knowledge and skill tests. This manual will help you pass the tests. To find out which parts of this manual you should study, see Figure 1-1.

This Section Explains

- ***Commercial Driver's Licence Tests***
- ***Other Safety Act Rules***

1.1 Commercial Driver's License Tests

- ***Knowledge Tests***

You will have to take one or more knowledge tests, depending on what class of license and what endorsements you need. The CDL knowledge tests include:

- the General Knowledge Test, taken by all applicants.
- the Passenger Transport Test, taken by all bus driver applicants.
- the Air Brakes Test, which you must take if your vehicle has air brakes.
- the Combination Vehicles Test, which is required if you want to drive combination vehicles.
- the Hazardous Materials Test, required if you want to haul hazardous material or waste.
- the Tanker Test, required if you want to haul liquids in bulk.
- the Doubles/Triples Test, required if you want to pull double or triple trailers.

- ***Skills Tests***

If you pass the required knowledge tests, you can take the CDL skills tests. There are three types of CDL skills tests: the pre-trip inspection test, the basic control skills test, and the road test. These are described below. You must take these tests in the type of vehicle you wish to be licensed for.

How To Use This Manual

If you want to get a license to drive this type of vehicle or a similar tank vehicle*	Study these sections of the driver's manual
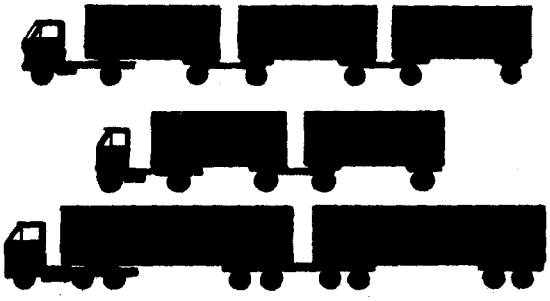	Section 1: Introduction Section 2: Driving Safely Section 3: Cargo* Section 5: Air Brakes Section 6: Combination Vehicles Section 7: Haz Mat (If needed)
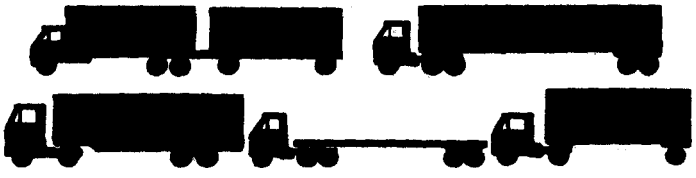	Section 1: Introduction Section 2: Driving Safely Section 3: Cargo* Section 5: Air Brakes Section 6: Combination Vehicles (except double / triple trailer info) Section 7: Haz Mat (If needed)
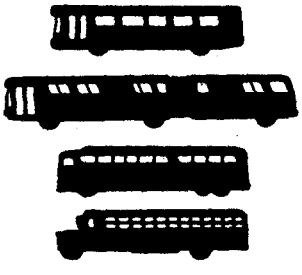	Section 1: Introduction Section 2: Driving Safely Section 3: Cargo Section 4: Passengers Section 5: Air Brakes (if needed)
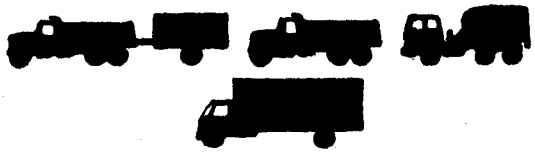	Section 1: Introduction Section 2: Driving Safely Section 3: Cargo* Section 5: Air Brakes (if needed) Section 7: Haz Mat (If needed)
(CDL required only if these vehicles are used to haul hazardous materials) 	Section 1: Introduction Section 2: Driving Safely Section 3: Cargo* Section 7: Haz Mat

* If you want a tank vehicle endorsement, study especially Section 3.4

Figure 1-1. How To Use This Manual

Pretrip Inspection

Purpose. To see if you know whether the vehicle is safe to drive.

Test Procedure. You may be asked to do a pretrip inspection of your vehicle or to explain to the examiner what you would inspect and why. The examiner will mark on a scoring form each item that you correctly inspect or explain. This manual tells you what you need to inspect.

Basic Control Skills Test

Purpose. To evaluate your basic skills in controlling the vehicle.

Set-up. The test set-up consists of various exercises marked out by lines, traffic cones, or something similar. The exercises may include moving the vehicle forward, backing, and turning maneuvers.

The examiner will explain to you how each exercise is to be done. You will be scored on how well you stay within the exercise boundaries and how many pullups you make.

Road Test

Purpose. To evaluate your ability to drive safely in a variety of on-the-road situations.

Test procedure. The test drive is taken over a route specified by the examiner. It may include left and right turns, intersections, railway crossings, curves, up and down grades, rural or semi-rural roads, city multi-lane streets, and expressway driving.

You will drive over the test route following instructions given by the examiner. The examiner will score specific tasks such as turns, merging into traffic, lane changes, and speed control, at specific places along the route. The examiner will also score whether you correctly do tasks such as signalling, searching for hazards, controlling speed, and lane positioning.

1.2 Other Safety Act Rules

There are other new Commercial Motor Vehicle Safety Act rules which affect drivers.

- You cannot have more than one license. If you break this rule, a court may fine you up to $5000 or put you in jail. Keep your home state license and return any others.
- If you are an experienced commercial driver and have a safe driving record, you may not need to take the skills test to get your CDL. Check with your driver licensing authorities.
- You must notify your employer within 30 days of a conviction for any traffic violation (except parking). This is true no matter what type of vehicle you were driving.
- You must notify your motor vehicle licensing agency within 30 days if you are convicted in any other state of any traffic violation (except parking). This is true no matter what type of vehicle you were driving.

- You must notify your employer if your license is suspended, revoked, or cancelled, or if you are disqualified from driving.
- You must give your employer information on all driving jobs you have held for the past 10 years. You must do this when you apply for a commercial driving job.
- No one can drive a Commercial Motor Vehicle after April 1, 1992 without a CDL. (However, your State may require you to have a CDL before then.) A court may fine you up to $5000 or put you in jail for breaking this rule.
- Your employer may not let you drive a Commercial Motor Vehicle if you have more than one license or if your CDL is suspended or revoked. A court may fine the employer up to $5000 or put him/her in jail for breaking this rule.
- All states will be connected to one computerized system to share information about CDL drivers. The States will check on drivers' accident records and be sure that drivers don't get more than one CDL.
- You will lose your CDL for at least one year for a first offense:
  - if you drive a Commercial Motor Vehicle (CMV) under the influence of alcohol or a controlled substance (for example, illegal drugs).
  - if you leave the scene of an accident involving a CMV you were driving.
  - if you used a CMV to commit a felony.

  If the offense occurs while you are operating a CMV that is placarded for hazardous materials, you will lose your CDL for at least 3 years. You will lose your CDL for life for a second offense. You will also lose your CDL for life if you use a CMV to commit a felony involving controlled substances.
- You will lose your CDL:
  - for at least 60 days if you have committed 2 serious traffic violations within a 3-year period involving a CMV.
  - for at least 120 days for 3 serious traffic violations within a 3-year period.

  "Serious traffic violations" are excessive speeding, reckless driving, and traffic offenses committed in a CMV in connection with fatal traffic accidents.
- If you drive when your blood alcohol concentration is .04 percent or more, you are driving under the influence of alcohol. You will lose your CDL for one year for your first offense. You will lose it for life for your second offense. If your blood alcohol concentration is less than 0.04 percent but you have any detectable amount, you will be put out-of-service for 24 hours.

These rules will improve highway safety for you and for all highway users.

Your State may have additional rules which you must also obey.

Section 2: Driving Safely

This section contains general knowledge and safe driving practices which **all** commercial drivers should know. You must take a test on this information to get a commercial driver's license.

This section does **not** contain information on air brakes, combination vehicles (tractor-semitrailer, doubles, triples, truck pulling heavy trailer) or buses. You must read other sections to get such information if it applies to the type of vehicle you wish to drive.

This section does have some information on hazardous materials. We put it in so you will know when you require a Hazardous Materials Endorsement. You will find the information you need to get this endorsement in Section 7.

This Section Covers

- ***Vehicle Inspection***
- ***Vehicle Control***
- ***Shifting Gears***
- ***Seeing***
- ***Communicating***
- ***Speed & Space Management***
- ***Night Driving***
- ***Winter Driving***
- ***Mountain Driving***
- ***Emergencies***
- ***Staying Alert***

2.1 Vehicle Inspection

- ***Why Inspect?***

Safety. Safety is the most important and obvious reason. Inspecting your vehicle helps you to know your vehicle is safe.

Legal requirements. Federal and State laws require inspection by the driver. Federal and State inspectors also inspect commercial vehicles. An unsafe vehicle can be put "out of service" until the driver or owner fixes it.

- ***Types of Vehicle Inspection***

Pretrip Inspection. You do a pretrip inspection before each trip to find problems that could cause a crash or breakdown.

During a Trip. For safety you should:

- Watch gauges for signs of trouble.
- Use your senses to check for problems (look, listen, smell, feel).
- Check critical items when you stop:
  - Tires, wheels and rims.
  - Brakes.
  - Lights.
  - Brake and electrical connections to trailer.
  - Trailer coupling devices.
  - Cargo securement devices.

After-Trip Inspection and Report. You do an after-trip inspection at the end of the trip, day, or tour of duty on each vehicle you operated. It may include filling out a **vehicle condition report** listing any problems you find. The inspection report helps the vehicle owner know when to fix something.

- ***What to Look For***

Look for Tire Problems. It is dangerous to drive with bad tires. Look for problems such as:

- Too much or too little air pressure.

- Bad wear. You need at least 4/32 inch tread depth in every major groove on front wheels. You need 2/32 inch on other wheels. No fabric should show through the tread or sidewall.
- Cuts or other damage.
- Tread separation.
- Dual tires that come in contact with each other or parts of the vehicle.
- Mismatched sizes.
- Radial and bias-ply tires used together.
- Cut or cracked valve stems.
- Regrooved, recapped, or retreaded tires on the front wheels of a bus. These are prohibited.

Wheel and Rim Problems

- Bad wheels or rims could cause an accident.
- A damaged rim can cause the tire to lose pressure or come off.
- Rust around wheel nuts may mean the nuts are loose - check tightness.
- After a tire has been changed, stop a short while later and recheck tightness of nuts.
- Missing clamps, spacers, studs, lugs means danger.
- Mismatched, bent, cracked, lock rings are dangerous.
- Wheels or rims that have had welding repairs are not safe.

Bad Brake Drums or Shoes

- Cracked drums.
- Shoes or pads with oil, grease, brake fluid on them.
- Shoes worn dangerously thin, or missing or broken.

Steering System Defects (See Figure 2-1)

- Missing nuts, bolts, cotter keys or other parts.
- Bent, loose, or broken parts, such as steering column, steering gear box, or tie rods.
- If power steering equipped -- hoses, pumps, and fluid level; check for leaks.
- Steering wheel play of more than 10 degrees (approximately 2 inches movement at the rim of a 20-inch steering wheel) can make it hard to steer.

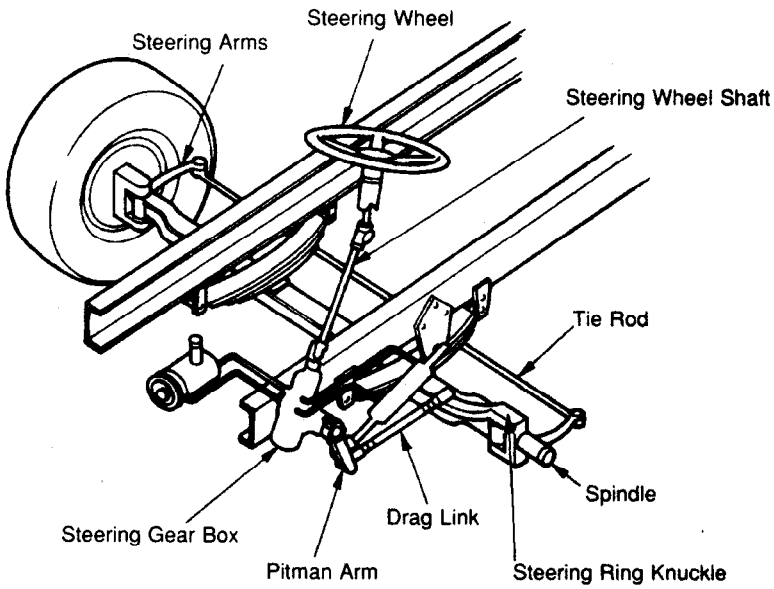

Figure 2-1
Examples of Steering System Key Parts

Suspension Systems Defects. The suspension system holds up the vehicle and its load. It keeps the axles in place. Therefore broken suspension parts can be extremely dangerous. You should check for:

- Spring hangers (Figure 2-2) that allow movement of axle from proper position
- Cracked or broken spring hangers.
- Missing or broken leaves in any leaf spring. If one fourth or more are missing, it will put the vehicle "out of service" but any defect could be dangerous (Figure 2-3).
- Broken leaves in a multi-leaf spring or leaves that have shifted so they might hit a tire or other part.
- Leaking shock absorbers (Figure 2-4).
- Torque rod or arm, U-bolts, spring hangers or other axle positioning parts that are cracked, damaged, or missing (Figure 2-2 and 2-4).
- Air suspension systems that are damaged and/or leaking.
- Any loose, cracked, broken or missing frame members.

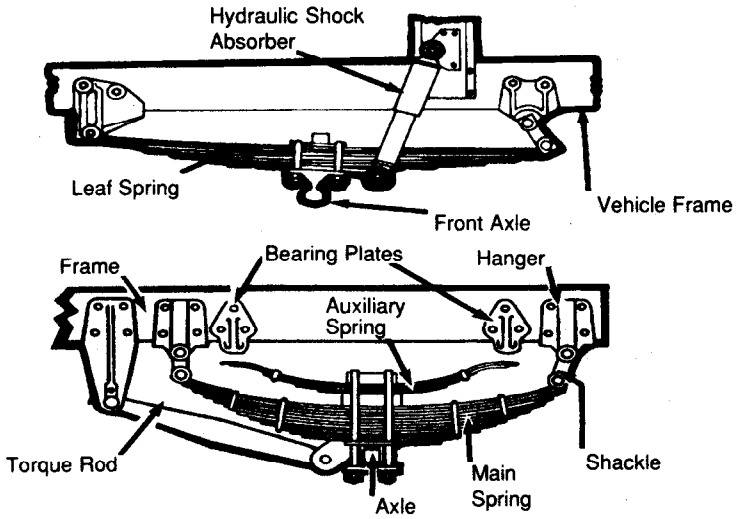

Figure 2-2
Key Suspension Parts

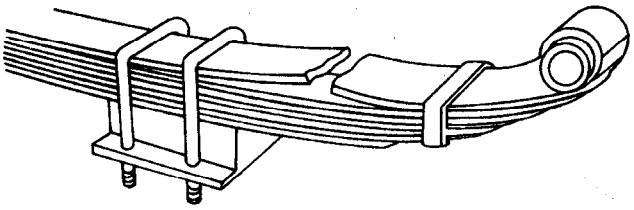

Figure 2-3
Safety Defect:
Broken Leaf in Leaf Spring

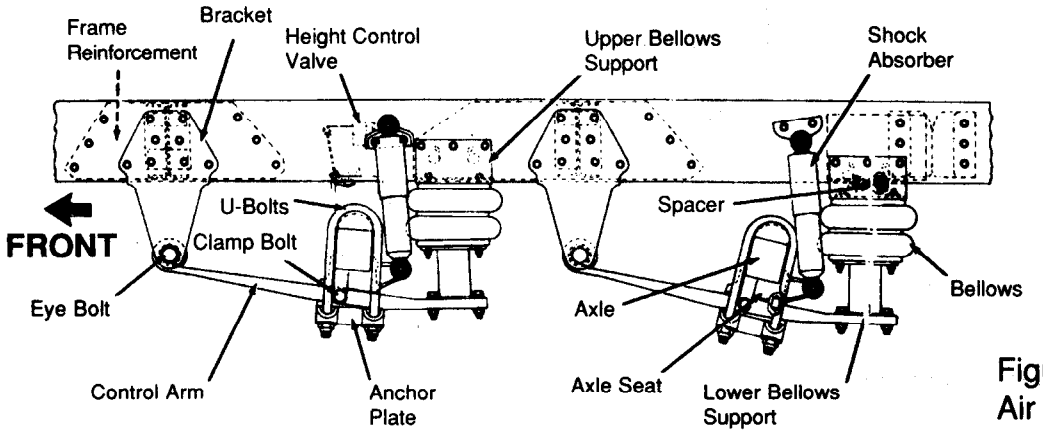

Figure 2-4
Air Suspension Parts

Exhaust System Defects. A broken exhaust system can let poison fumes into the cab or sleeper berth. You should check for:

- Loose, broken, or missing exhaust pipes, mufflers, tailpipes or vertical stacks.
- Loose, broken, or missing mounting brackets, clamps, bolts or nuts.
- Exhaust system parts rubbing against fuel system parts, tires or other moving parts of vehicle.
- Exhaust system parts that are leaking.

Emergency Equipment. Vehicles should be equipped with emergency equipment:

- Fire extinguisher(s).
- Spare electrical fuses (unless equipped with circuit breakers).
- Warning devices for parked vehicles (for example, three reflective warning triangles).

Cargo (Trucks). You must inspect for cargo overloading and correct balance and securement before each trip. If the cargo contains hazardous materials, you must inspect for proper papers and placarding.

A 7-Step Inspection Method

Method of inspecting. You should do a pretrip inspection the same way each time so you will learn all the steps and be less likely to forget something. The following seven-step procedure should be a useful guide. Memory aids are shown in Figures 2-5, 2-6, and 2-7. They may help you remember important things to inspect. You can cut them out and bring them with you when you take your CDL test. When you take your test you must explain to the examiner what parts of the vehicle you are inspecting. Describe the possible defects you are looking for. It will help you pass the test if you practice this with a friend beforehand. You will be marked down for important items on your vehicle that you fail to inspect.

1: Vehicle Overview

Approaching the vehicle. Notice general condition. Look for damage or vehicle leaning to one side. Look under the vehicle for fresh oil, coolant, grease or fuel leaks. Check the area around the vehicle for hazards to vehicle movement (people, other vehicles, objects, low hanging wires or limbs, etc.)

Review last vehicle inspection report. Drivers may have to make a vehicle inspection report in writing each day. The vehicle owner should repair any items in the report that affects safety. You should look at the last report to find out what was the matter, if anything. Inspect the vehicle to find out if problems were fixed.

Test Your Knowledge
1. What is the most important reason for doing vehicle inspections?
2. What things should you check during a trip?
3. Name some key steering system parts.
4. Name some suspension system defects.
5. What three kinds of emergency equipment must you have?
6. What is the minimum tread depth for front tires?
7. -- For other tires?
These questions may be on the test. If you can't answer all, reread the last four pages.

Vehicle Inspection Memory Aids
(Key Locations To Inspect)

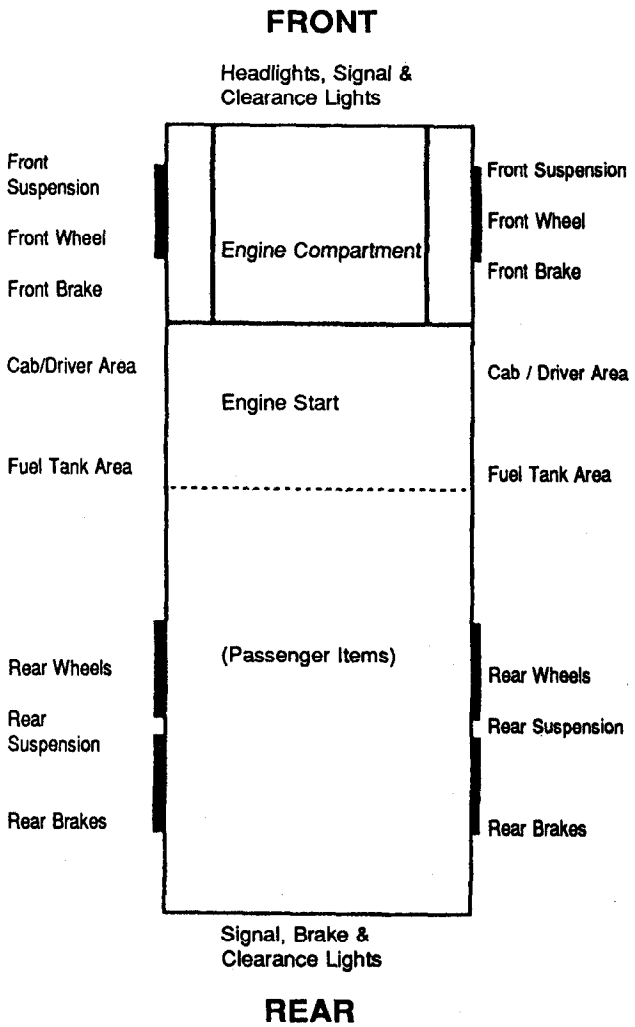

Figure 2-5. Straight Truck / School Bus

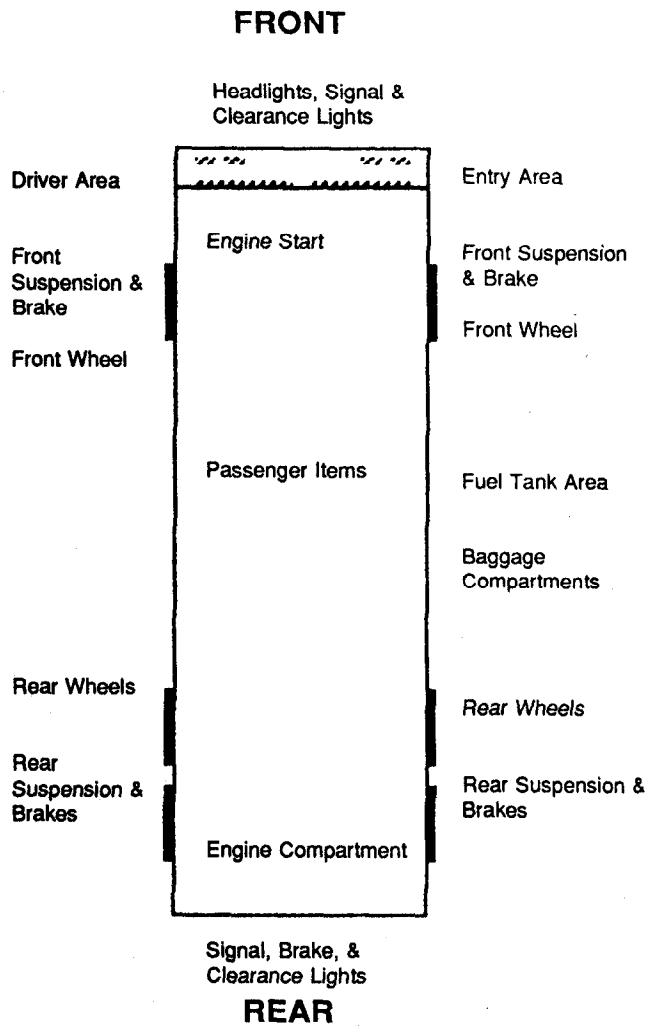

Figure 2-6. Coach / Transit Bus

Safety note: Always put vehicle key in your pocket -- or someone might move the vehicle while you are checking underneath it.

Vehicle Inspection Memory Aids
(Key Locations To Inspect)

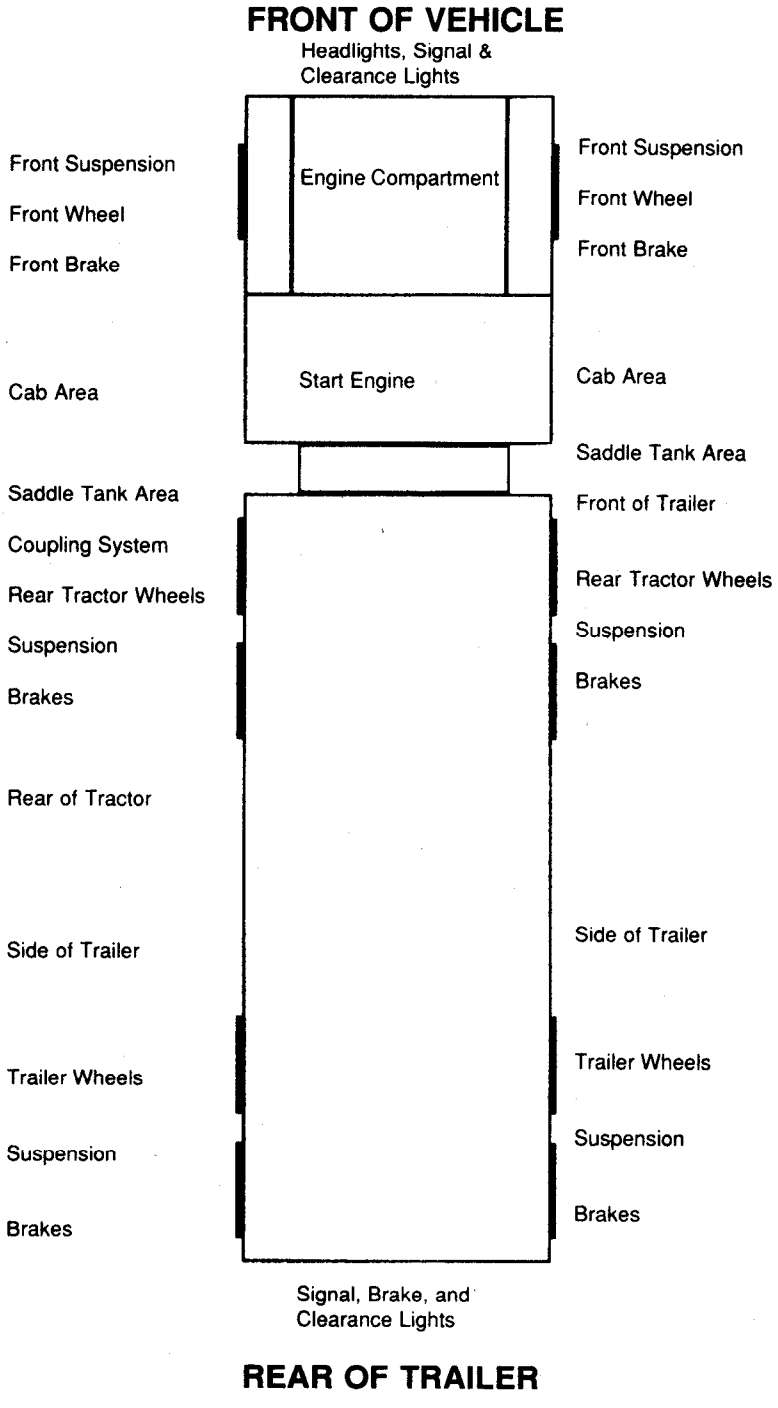

Figure 2-7. Tractor - Trailer

Safety note: If you are parked on a street, walk around so you are facing the oncoming traffic. Pay attention so you don't get run over.

Check that the parking brakes are on and/or wheels chocked. You may have to raise the hood, tilt the cab (secure loose things so they don't fall and break something), or open the engine compartment door. Check the following:

2: Check Engine Compartment

- Engine oil level.
- Coolant level in radiator; condition of hoses.
- Power steering fluid level; hose condition (if so equipped).
- Windshield washer fluid level.
- Battery fluid level, connections and tie downs (battery may be located elsewhere).
- Automatic transmission fluid level (may require engine to be running).
- Check belts for tightness and excessive wear (alternator, water pump, air compressor) -- learn how much "give" the belts should have when adjusted right, and check each one.
- Leaks in the engine compartment (fuel, coolant, oil, power steering fluid, hydraulic fluid, battery fluid).
- Cracked, worn electrical wiring insulation.

Lower and secure hood, cab, or engine compartment door.

Get in and Start Engine

3: Start Engine and Inspect Inside the Cab

- Make sure parking brake is on.
- Put gearshift in neutral (or "park" if automatic).
- Start engine; listen for unusual noises.

Look at the Gauges

- **Oil pressure.** Should come up to normal within seconds after engine is started.
- **Ammeter** and/or **voltmeter**. Should be in normal range(s).
- **Coolant temperature.** Should begin gradual rise to normal operating range.
- **Engine oil temperature.** Should begin gradual rise to normal operating range.
- **Warning lights and buzzers.** Oil, coolant, charging circuit warning lights should go out right away.

Check Condition of Controls. Check all of the following for looseness, sticking, damage, or improper setting

- Steering wheel.
- Clutch.
- Accelerator ("gas pedal").
- Brake controls.
  - Foot brake.
  - Trailer brake (if vehicle has one).
  - Parking brake.
  - Retarder controls (if vehicle has them).
- Transmission controls.
- Interaxle differential lock (if vehicle has one).
- Horn(s).
- Windshield wiper/washer.
- Lights.
  - Headlights.
  - Dimmer switch.
  - Turn signal.
  - 4-way flashers.
  - Clearance, identification, marker light switch(s).

Check Mirrors and Windshield. Inspect mirrors and windshield for cracks, dirt, illegal stickers or other obstructions to seeing. Clean and adjust as necessary.

Check Emergency Equipment

- Check for safety equipment:
  - Spare electrical fuses (unless vehicle has circuit breakers).
  - Three red reflective triangles.
  - Properly charged and rated fire extinguisher.
- Check for optional items such as:
  - Tire chains (where winter conditions require them).
  - Tire changing equipment.
  - List of emergency phone numbers.
  - Accident reporting kit (packet).

4: Turn Off Engine and Check Lights

Make sure the parking brake is set, turn off the engine, and take the key with you. Turn on headlights (low beams) and four way flashers, and get out.

- Go to front of vehicle and check that low beams are on and both of the four-way flashers are working.
- Push dimmer switch and check that high beams work.

5: Do Walkaround Inspection

- Turn off headlights and four-way hazard warning flashers.
- Turn on parking, clearance, side-marker and identification lights.
- Turn on right turn signal, and start walkaround inspection.

General

- Walk around and inspect.
- Clean all lights, reflectors and glass as you go along.

Left Front Side

- Driver's door glass should be clean.
- Door latches or lock work properly.
- Left front wheel.
  - Condition of wheel and rim -- missing, bent, broken studs, clamps, lugs, any signs of misalignment.
  - Condition of tires -- properly inflated, valve stem and cap OK, no serious cuts, bulges, tread wear.
  - Use wrench to test rust streaked lug nuts, indicating looseness.
  - Hub oil level ok, no leaks.
- Left front suspension.
  - Condition of spring, spring hangers, shackles, u-bolts.
  - Shock absorber condition.
- Left front brake.
  - Condition of brake drum.
  - Condition of hoses.

Front

- Condition of front axle.
- Condition of steering system.
  - No loose, worn, bent, damaged or missing parts.
  - Must grab steering mechanism to test for looseness.
- Condition of windshield.
  - Check for damage and clean if dirty.
  - Check windshield wiper arms for proper spring tension.
  - Check wiper blades for damage, "stiff" rubber, and securement.

- Lights and reflectors.
  - Parking, clearance and identification lights clean, operating and proper color (amber at front).
  - Reflectors clean and proper color (amber at front).
- Right front turn signal light clean, operating, and proper color (amber or white on signals facing forward).

Right Side

- Right front: check all items as done on left front.
- Primary and safety cab locks engaged (if cab-over-engine design).
- Right fuel tank(s).
  - Securely mounted, not damaged or leaking.
  - Fuel crossover line secure.
  - Tank(s) contain enough fuel.
  - Cap(s) on and secure.
- Condition of visible parts.
  - Rear of engine -- not leaking.
  - Transmission -- not leaking.
  - Exhaust system -- secure, not leaking, not touching wires, fuel or air lines.
  - Frame and cross members -- no bends, cracks.
  - Air lines and electrical wiring -- secured against snagging, rubbing, wearing.
  - Spare tire carrier or rack not damaged (if so equipped).
  - Spare tire and/or wheel securely mounted in rack.
  - Spare tire and wheel adequate (proper size, properly inflated).
- Cargo securement (trucks).
  - Cargo properly blocked, braced, tied, chained, etc.
  - Header board adequate, secure (if required).
  - Side boards, stakes strong enough, free of damage, properly set in place (if so equipped).
  - Canvas or tarp (if required) properly secured to prevent tearing, billowing or blocking of mirrors.
  - If oversize, all required signs must be safely and properly mounted and all required permits in driver's possession.
  - Curbside cargo compartment doors securely closed, latched/locked, required security seals in place.

Right Rear

- Condition of wheels and rims -- no missing, bent, broken spacers, studs, clamps, lugs.
- Condition of tires -- properly inflated, valve stems and caps OK, no serious cuts, bulges, tread wear, tires not rubbing each other and nothing stuck between them.
- Tires same type, e.g., not mixed radial and bias types.
- Tires evenly matched (same sizes).
- Wheel bearing/seals not leaking.
- Suspension.
  - Condition of spring(s), spring hangers, shackles and U-bolts
  - Axle secure.
  - Powered axle(s) not leaking lube (gear oil).
  - Condition of torque rod arms, bushings.
  - Condition of shock absorber(s).
  - If retractable axle equipped, check condition of lift mechanism, if air powered check for leaks.

- Brakes.
  - Condition of brake drum(s).
  - Condition of hoses - look for any wear due to rubbing.
- Lights and reflectors.
  - Side-marker lights clean, operating and proper color (red at rear, others amber).
  - Side-marker reflectors clean and proper color (red at rear, others amber).

Rear

- Lights and reflectors.
  - Rear clearance and identification lights clean, operating and proper color (red at rear).
  - Reflectors clean and proper color (red at rear).
  - Taillights clean, operating and proper color (red at rear).
  - Right rear turn signal operating, and proper color (red, yellow, or amber at rear).
- License plate(s) present, clean and secured.
- Splash guards present, not damaged, properly fastened, not dragging on ground or rubbing tires.
- Cargo secure (trucks).
  - Cargo properly blocked, braced, tied, chained, etc.
  - Tailboards up and properly secured.
  - End gates free of damage, properly secured in stake sockets.
  - Canvas or tarp (if required) properly secured to prevent tearing, billowing to block either the rearview mirrors or to cover rear lights.
  - If over-length, or over-width, make sure all signs and/or additional lights/flags are safely and properly mounted and all required permits are in driver's possession.
  - Rear doors securely closed, latched/locked.

Left Side

- Check all items as done on right side, plus:
  - Battery (if not mounted in engine compartment).
  - Battery box securely mounted to vehicle.
  - Box has secure cover.
  - Battery(s) secured against movement.
  - Battery(s) not broken or leaking
  - Fluid in battery(s) at proper level (except maintenance-free type).
  - Cell caps present and securely tightened (except maintenance-free type).
  - Vents in cell caps free of foreign material (except maintenance-free type).

Check Signal Lights

Get In and Turn Off Lights.

- Turn off all lights.
- Turn on stop lights (apply trailer hand brake, or have a helper put on the brake pedal).
- Turn on left turn signal lights.

Get Out and Check Lights.

- Left front turn signal light clean, operating and proper color (amber or white on signals facing the front).
- Left rear turn signal light and both stop lights clean, operating and proper color (red, yellow, or amber).

Get In Vehicle.

- Turn off lights not needed for driving.
- Check for all required papers, trip manifests, permits, etc.
- Secure all loose articles in cab (they might interfere with operation of the controls, or hit you in a crash).
- Start the engine.

7: Start the Engine and Check Brake System

Test For Hydraulic Leaks. If the vehicle has hydraulic brakes, pump the brake pedal three times. Then apply firm pressure to the pedal and hold for five seconds. The pedal should not move. If it does, there may be a leak or other problem. Get it fixed before driving.

If the vehicle has air brakes, do the checks described in Sections 5 and 6 of this manual.

Test Parking Brake

- Fasten seat belt.
- Allow vehicle to move forward **slowly**.
- Apply parking brake.
- If it doesn't stop vehicle, it is faulty; get it fixed.

Test Service Brake Stopping Action

- Go about five miles per hour.
- Push brake pedal firmly.
- "Pulling" to one side or the other can mean brake trouble.
- Any unusual brake pedal "feel" or delayed stopping action can mean trouble.

This completes the pretrip inspection.

If you find anything unsafe during the pretrip inspection, get it fixed. Federal and state laws forbid operating an unsafe vehicle.

Test Your Knowledge
1. Name some things you should check on the front of your vehicle during the walkaround inspection. 2. What should wheel bearing seals be checked for? 3. How many red reflective triangles should you carry? 4. How do you test hydraulic brakes for leaks? 5. Can you bring the "Vehicle inspection memory aid" with you to the test? 6. Why put the starter switch key in your pocket during the pretrip inspection?
These questions may be on the test. If you can't answer all, read about the 7 step inspection method.

· ***Inspection During a Trip***

Check Vehicle Operation Regularly

You should check:

- Instruments.
- Air pressure gauge (if you have air brakes).
- Temperature gauges.
- Pressure gauges.
- Ammeter/voltmeter.
- Mirrors.
- Tires.
- Cargo, cargo covers.

If you see, hear, smell, or feel anything that might mean trouble, check it out.

Safety Inspection

- Drivers of trucks and truck tractors must inspect within the first 25 miles of a trip and every 150 miles or every 3 hours (whichever comes first) afterward.
- Check these things
  - Cargo doors and/or cargo securement.
  - Tires -- Enough air pressure; not overheated.
  - Brakes -- not overheated (put back of hand near brake drums to test).
  - Coupling devices.

· ***After-Trip Inspection & Report***

You may have to make a written report each day on the condition of the vehicle(s) you drove. Report anything affecting safety or possibly leading to mechanical breakdown.

The vehicle inspection report tells the vehicle owner about problems that may need fixing. Keep a copy of your report in the vehicle for one day. That way, the next driver can learn about any problems you have found.

2.2 Basic Control of Your Vehicle

To drive a vehicle safely, you must be able to control its speed and direction. Safe operation of a commercial vehicle requires skill in:

- Accelerating.
- Steering.
- Shifting gears.
- Braking.

Fasten your seatbelt when on the road. Apply the parking brake when you leave your vehicle.

· ***Accelerating***

Don't roll back when you start. You may hit someone behind you. Partly engage the clutch before you take your right foot off the brake. Put on the parking brake whenever necessary to keep from rolling back. Release the parking brake only when you have applied enough engine power to keep from rolling back.

Speed up smoothly and gradually so the vehicle does not jerk. Rough acceleration can cause mechanical damage. When pulling a trailer, rough acceleration can damage the coupling.

Speed up very gradually when traction is poor, as in rain or snow. If you use too much power, the drive wheels may spin. You could lose control. If the drive wheels begin to spin, take your foot off the accelerator.

· ***Steering***

Hold the Wheel Right. Hold the steering wheel firmly with both hands. Your hands should be on opposite sides of the wheel. If you hit a curb or a pothole (chuckhole), the wheel could pull away from your hands unless you have a firm hold.

· ***Backing with a Trailer***

Backing with a Trailer. When backing a car, straight truck or bus you turn the top of the steering wheel toward the direction you want to go. When backing a trailer, you turn the steering wheel in the opposite direction. Once the trailer starts to turn, you must turn the wheel the other way to follow the trailer.

Whenever you back with a trailer, try to position your vehicle so you can back in a straight line. If you must back on a curved path, back to the driver's side so you can see.

Back slowly. This will let you make corrections before you get too far off course.

Use the mirrors. The mirrors will help you see whether the trailer is drifting to one side or the other.

Correct drift immediately. As soon as you see the trailer getting off the proper path, correct it by turning the top of the steering wheel in the direction of the drift.

Pull forward. When backing a trailer, make pull-ups to reposition your vehicle as needed.

· ***Backing Safely***

Because you cannot see everything behind your vehicle, **backing is always dangerous**. Avoid backing whenever you can. When you park, try to park so you will be able to pull forward when you leave. When you have to back, here are a few simple safety rules:

- Look at your path.
- Back slowly.
- Back and turn toward the driver's side whenever possible.
- Use a helper whenever possible.

These rules are discussed in turn below.

Look at Your Path. Look at your line of travel **before** you begin. Get out and walk around the vehicle. Check your clearance to the sides and overhead in and near the path your vehicle will take.

Back Slowly. Always back as slowly as possible. Use the lowest reverse gear. That way you can more easily correct any steering errors. You also can stop quickly if necessary.

Back and Turn Toward the Driver's Side. Back to the driver's side so you can see better. Backing toward the right side is very dangerous because you can't see as well. If you back and turn toward the driver's side, you can watch the rear of your vehicle by looking out the side window. Use driver-side backing -- even if it means going around the block to put your vehicle in this position. The added safety is worth it.

Use a Helper. Use a helper when you can. There are blind spots you can't see. That's why a helper is important.

The helper should stand near the back of your vehicle where you can see the helper. Before you begin backing, work out a set of hand signals that you both understand. Agree on a signal for "stop".

2.3 Shifting Gears

Correct shifting of gears is important. If you can't get your vehicle into the right gear while driving, you will have less control.

Manual Transmissions

Basic Method for Shifting Up. Most heavy vehicles with manual transmissions require double clutching to change gears. This is the basic method:

1. Release accelerator, push in clutch and shift to neutral at the same time.
2. Release clutch.
3. Let engine and gears **slow down** to the RPM required for the next gear (this takes practice).
4. Push in clutch and shift to the higher gear at the same time.
5. Release clutch and press accelerator at the same time.

Shifting gears using double clutching requires practice. If you remain too long in neutral, you may have difficulty putting the vehicle into the next gear. If so, don't try to force it. Return to neutral, release clutch, increase engine speed to match road speed, and try again.

Knowing When to Shift Up. There are two ways of knowing when to shift:

Use engine speed (RPM). Study the driver's manual for your vehicle and learn the operating RPM range. Watch your tachometer, and shift up when your engine reaches the top of the range. (Some newer vehicles use "progressive" shifting: the RPM at which you shift becomes higher as you move up in the gears. Find out what's right for the vehicle you will operate.)

Use road speed (mph). Learn what speeds each gear is good for. Then, by using the speedometer, you'll know when to shift up.

With either method, you may learn to use engine sounds to know when to shift.

Test Your Knowledge
1. Why should you back toward the driver's side?
2. What is a pull-up?
3. If stopped on a hill, how can you start moving without rolling back?
4. When backing, why is it important to use a helper?
5. What's the most important hand signal that you and the helper should agree on?
These questions may be on the test. If you can't answer all, reread 2.2: Basic Control of your Vehicle.

Basic Procedures for Shifting Down

1. Release accelerator, push in clutch and shift to neutral at the same time.
2. Release clutch.
3. Press accelerator, **increase** engine and gear speed to the RPM required in the lower gear.
4. Push in clutch and shift to lower gear at the same time.
5. Release clutch and press accelerator at the same time.

Downshifting, like upshifting, requires knowing when to shift. Use either the tachometer or the speedometer and downshift at the right RPM or road speed.

Special conditions where you should downshift are:

Before starting down a hill. Slow down and shift down to a speed that you can control without using the brakes hard. Otherwise the brakes can overheat and lose their braking power. Downshift **before** starting down the hill. Make sure you are in a low enough gear, usually lower than the gear required to climb the same hill.

Before entering a curve. Slow down to a safe speed, and downshift to the right gear before entering the curve. This lets you use some power through the curve to help the vehicle be more stable while turning. It also lets you speed up as soon as you are out of the curve.

Multi-Speed Rear Axles and Auxiliary Transmissions

Multi-speed rear axles and auxiliary transmissions are used on many vehicles to provide extra gears. You usually control them by a selector knob or switch on the gearshift lever of the main transmission. There are many different shift patterns. Learn the right way to shift gears in the vehicle you will drive.

Automatic Transmissions

Some vehicles have automatic transmissions. You can select a low range to get greater engine braking when going down grades. The lower ranges prevent the transmission from shifting up beyond the selected gear (unless the governor RPM is exceeded). It is very important to use this braking effect when going down grades.

Retarders

Some vehicles have "retarders." Retarders help slow a vehicle, reducing the need for using your brakes. They reduce brake wear and give you another way to slow down. There are many types of retarders (exhaust, engine, hydraulic, electric). All retarders can be turned on or off by the driver. On some the retarding power can be adjusted. When turned "on," retarders apply their braking power (to the drive wheels only) whenever you let up on the accelerator pedal all the way.

Caution. When your drive wheels have poor traction, the retarder may cause them to skid. Therefore you should turn the retarder off whenever the road is wet, icy or snow covered.

Test Your Knowledge
1. What are the two special conditions where you should downshift? 2. When should you downshift automatic transmissions? 3. Retarders keep you from skidding when the road is slippery. True or false? 4. What are two ways to know when to shift?
These questions may be on the test. If you can't answer all, reread 2.3: Shifting Gears.

2.4 Seeing

To be a safe driver you need to know what's going on all around your vehicle. Not looking properly is a major cause of accidents.

Seeing Ahead

All drivers look ahead; but many don't look **far enough** ahead.

Importance of Looking Far Enough Ahead. Because stopping or changing lanes can take a lot of distance, knowing what the traffic is doing on all sides of you is very important. You need to look well ahead to make sure you have room to make these moves safely.

How Far Ahead to Look. Most good drivers look 12 to 15 seconds ahead. That means looking ahead the distance you will travel in 12 to 15 seconds. At lower speeds, that's about one block. At highway speeds it's about a quarter of a mile. If you're not looking that far ahead, you may have to stop too quickly or make quick lane changes. Looking 12 to 15 seconds ahead doesn't mean not paying attention to things that are closer. Good drivers shift their attention back and forth, near and far.

Look for Traffic. Look for vehicles coming onto the highway or into your lane or turning. Watch for brakelights from slowing vehicles. By seeing these things far enough ahead, you can change your speed or change lanes if necessary to avoid a problem.

Look for Road conditions. Look for hills and curves--anything you'll have to slow or change lanes for. Pay attention to traffic signals and signs. If a light has been green for a long time, it will probably change before you get there. Start slowing down and be ready to stop. Traffic signs may alert you to road conditions where you may have to change speed.

Seeing to the Sides and Rear

It's important to know what's going on behind and to the sides. Check your mirrors regularly. Check more often in special situations.

Regular Checks. You need to make regular checks of your mirrors to be aware of traffic and to check your vehicle.

Traffic. Check the mirrors for vehicles on either side and in back of you. In an emergency, you may need to know whether you can make a quick lane change. Use your mirrors to spot overtaking vehicles. There are "blind spots" that your mirrors cannot show you. Check your mirrors regularly to know where other vehicles are around you, and to see if they move into your blind spots.

Check your vehicle. Use the mirrors to keep an eye on your tires. It's one way to spot a tire fire. If you're carrying open cargo, you can use the mirrors to check it. Look for loose straps, ropes or chains. Watch for a flapping or ballooning tarp.

Special Situations. Special situations require more than regular mirror checks. These are lane changes, turns, merges, and tight maneuvers.

Lane changes. You need to check your mirror to make sure no one is alongside you or about to pass you. Check your mirrors:

- Before you change lanes to make sure there is enough room.
- After you have signaled, to check that no one has moved out of your blind spot.

- Right after you start the lane change to double-check that your path is clear.
- After you complete the lane change.

Turns. In turns, check your mirrors to make sure the rear of your vehicle will not hit anything.

Merges. When merging, use your mirrors to make sure the gap in traffic is large enough for you to enter safely.

Tight maneuvers. Any time you are driving in close quarters check your mirrors often. Make sure you have enough clearance.

How to Use Mirrors. Use mirrors correctly by checking them quickly and understanding what you see.

Checking quickly. When you use your mirrors while driving on the road, check quickly. Look back and forth between the mirrors and the road ahead. Don't focus on the mirrors for too long. Otherwise, you will travel quite a distance without knowing what's happening ahead.

Understanding what you see. Many large vehicles have curved (convex, "fisheye," "spot," "bugeye") mirrors that show a wider area than flat mirrors. This is often helpful. But everything appears smaller in a convex mirror than it would if you were looking at it directly. Things also seem farther away than they really are. It's important to realize this and to allow for it.

2.5 Communicating

- ***Signal Your Intentions***

Other drivers can't know what you are going to do until you tell them.

Signaling what you intend to do is important for safety. Here are some general rules for signaling.

Turns. There are three good rules for using turn signals.

1. Signal early. Signal well before you turn. It is the best way to keep others from trying to pass you.
2. Signal continuously. You need both hands on the wheel to turn safely. Don't cancel the signal until you have completed the turn.
3. Cancel your signal. Don't forget to turn off your turn signal after you've turned (if you don't have self-cancelling signals).

Lane Changes. Put your turn signal on before changing lanes. Change lanes slowly and smoothly. That way a driver you didn't see may have a chance to honk his/her horn or avoid your vehicle.

Slowing Down. Warn drivers behind you when you see you'll need to slow down. A few light taps on the brake pedal -- enough to flash the brake lights -- should warn following drivers. Use the 4-way emergency flashers for times when you are driving very slow or are stopped. Warn other drivers in any of the following situations:

Trouble ahead. The size of your vehicle may make it hard for drivers behind you to see hazards ahead. If you see a hazard that will require slowing down, warn the drivers behind by flashing your brake lights.

Tight turns. Most car drivers don't know how slow you have to go to make a tight turn in a large vehicle. Give drivers behind you warning by braking early and slowing gradually.

Stopping on the road. Truck and bus drivers sometimes stop in the road to unload cargo or passengers or to stop at a railroad crossing. Warn following drivers by flashing your brake lights. Don't stop suddenly.

Driving Slowly. Drivers often do not realize how fast they are catching up to a slow vehicle until they are very close. If you must drive slowly, alert following drivers by turning on your emergency flashers if it is legal. (Laws regarding the use of flashers differ from one state to another. Check the laws of the states where you will drive.)

Don't Direct Traffic. Some drivers try to help out others by signaling when it is safe to pass. You should not do this. You could cause an accident. You could be blamed and it could cost you many thousands of dollars.

Communicating Your Presence

Other drivers may not notice your vehicle even when it's in plain sight. Let them know you're there to help prevent accidents.

When Passing. Whenever you are about to pass a vehicle, pedestrian, or bicyclist, assume they don't see you. They could suddenly move in front of you. When it is legal, tap the horn lightly or, at night, flash your lights from low to high beam and back. And drive carefully enough to avoid a crash even if they don't see or hear you.

When It's Hard to See. At dawn or dusk or in rain or snow, you need to make yourself easier to see. If you are having trouble seeing other vehicles, other drivers will have trouble seeing you. Turn on your lights. Use the headlights, not just the identification or clearance lights. Use the low beams; high beams can bother people in the daytime as at night.

When Parked At the Side of the Road. When you pull off the road and stop, be sure to turn on the 4-way emergency flashers. This is important at night. Don't trust the taillights to give warning. Drivers have crashed into the rear of a parked vehicle because they thought it was moving normally.

If you must stop on a road or the shoulder of a road, you should put out your reflective triangles within ten minutes. Place your warning devices at the following locations:

- On the traffic side of the vehicle, within ten feet of the front or rear corners -- to mark the location of the vehicle. (See Figure 2-8.)
- About 100 feet behind and ahead of the vehicle, on the shoulder or in the lane you are stopped in. (See Figure 2-8.)

- Back beyond any hill, curve, or other obstruction that prevents other drivers from seeing the vehicle within 500 feet. (See Figure 2-9.)
- If you must stop on or by a one-way or divided highway, place warning devices 10 feet, 100 feet, and 200 feet toward the approaching traffic. (See Figure 2-10.)

When putting out the triangles hold them between yourself and the oncoming traffic for your own safety. (So other drivers can see you.)

Use Your Horn When Needed. Your horn can let others know you're there. It can help to avoid a crash. Use your horn when needed. However, it can startle others and could be dangerous when used unnecessarily.

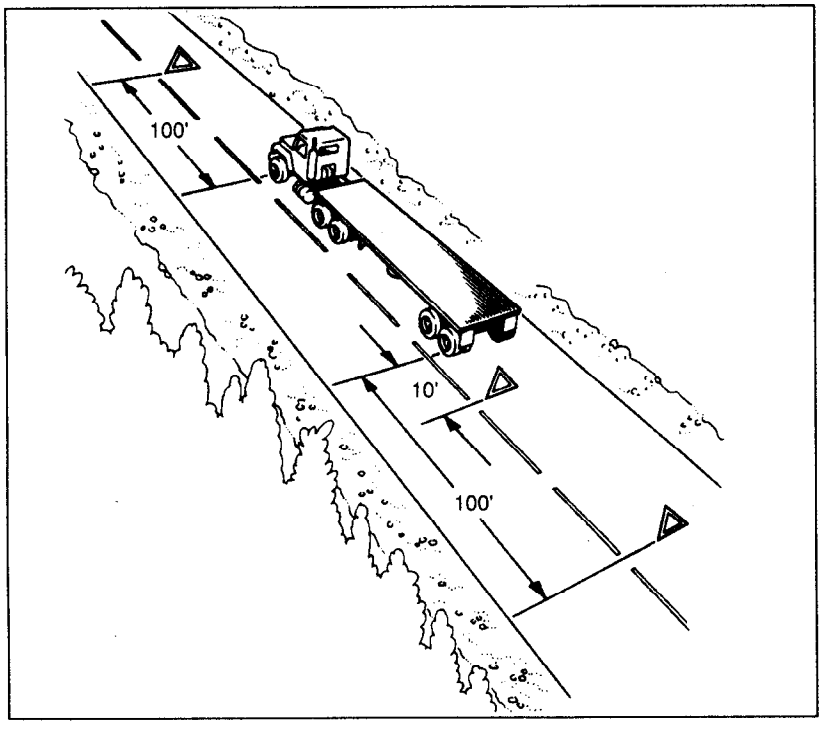

Figure 2-8
Warning Device Placement:
Two Lane or Undivided Highway

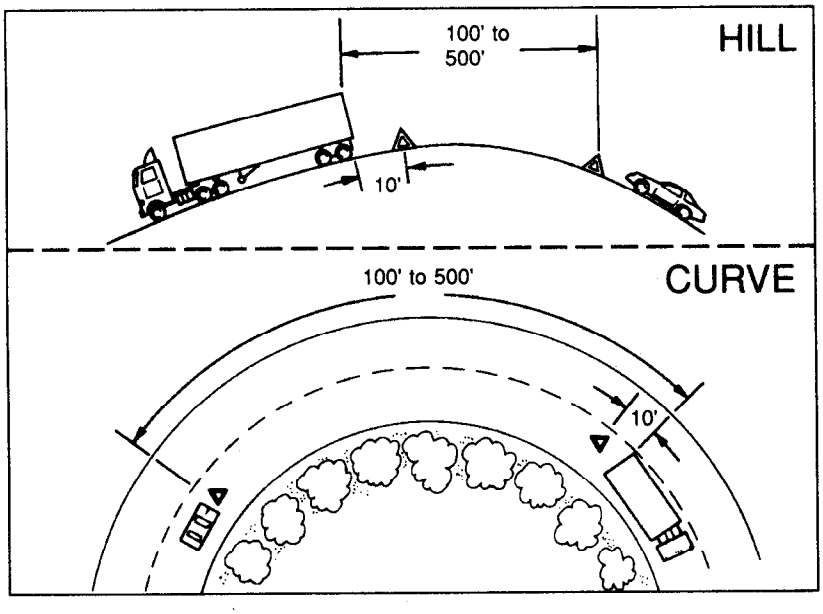

Figure 2-9.
Warning Device Placement:
Obstructed View

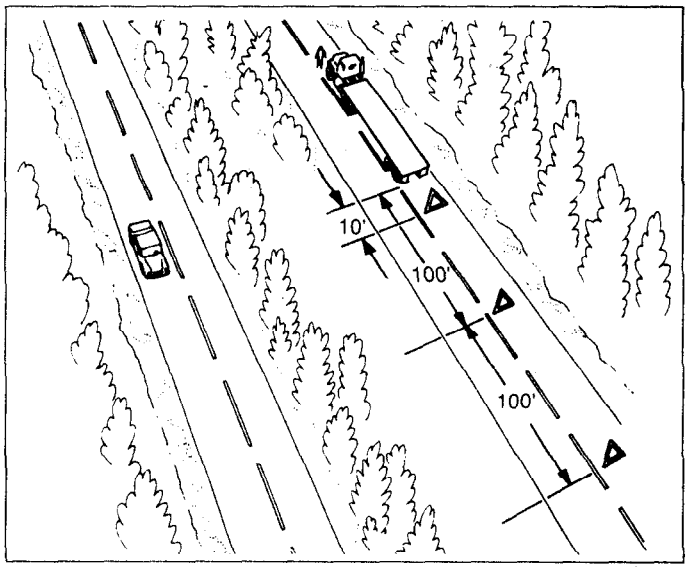

Figure 2-10.
Warning Device Placement:
One Way or Divided Highway

2.6 Controlling Speed

Driving too fast is a major cause of fatal crashes. You must adjust your speed depending on driving conditions. These include traction, curves, visibility, traffic, and hills.

Speed and Stopping Distance

There are three things that add up to total stopping distance:

Perception Distance
\+ Reaction Distance
\+ Braking Distance
= Total Stopping Distance

- **Perception distance.** This is the distance your vehicle travels from the time your eyes see a hazard until your brain recognizes it. The perception time for an alert driver is about 3/4 second. At 55 mph, you travel 60 feet in 3/4 second.
- **Reaction distance.** The distance traveled from the time your brain tells your foot to move from the accelerator until your foot is actually pushing the brake pedal. The average driver has a reaction time of 3/4 second. This accounts for an additional 60 feet traveled at 55 mph.
- **Braking distance.** The distance it takes to stop once the brakes are put on. At 55 mph on dry pavement with good brakes it can take a heavy vehicle about 170 feet to stop. It takes about 4 1/2 seconds.
- **Total stopping distance.** At 55 mph it will take about 6 seconds to stop and your vehicle will travel about the distance of a football field. (60 + 60 + 170 = 290 feet).

The effect of speed on stopping distance. Whenever you double your speed, it takes about **four** times as much distance to stop and your vehicle will have **four** times the destructive power if it crashes. High speeds increase stopping distances greatly. By slowing down a little, you can gain a lot in reduced braking distance.

The effect of vehicle weight on stopping distance. The heavier the vehicle, the more work the brakes must do to stop it and the more heat they absorb. But the brakes, tires, springs, and shock absorbers on heavy vehicles are designed to work best when the vehicle is

fully loaded. **Empty** trucks require **greater** stopping distances, because an empty vehicle has less traction. It can bounce and lock up its wheels, giving much poorer braking. (This is not usually the case with buses.)

Matching Speed to the Road Surface

You can't steer or brake a vehicle unless you have traction. Traction is friction between the tires and the road. There are some road conditions that reduce traction and call for lower speeds.

Slippery Surfaces. It will take longer to stop and it will be harder to turn without skidding when the road is slippery. You must drive slower to be able to stop in the same distance as on a dry road. Wet roads can double stopping distance. Reduce speed by about one third (e.g., slow from 55 to about 35 mph) on a wet road. On packed snow, reduce speed by a half, or more. If the surface is icy, reduce speed to a crawl and stop driving as soon as you can safely do so.

Identifying Slippery Surfaces. Sometimes it's hard to know if the road is slippery. Here are some signs of slippery roads.

Shaded areas. Shady parts of the road will remain icy and slippery long after open areas have melted.

Bridges. When the temperature drops, bridges will freeze before the road will. Be especially careful when the temperature is close to 32 degrees F.

Melting ice. Slight melting will make ice wet. Wet ice is much more slippery than ice that is not wet.

Black ice. Black ice is a thin layer that is clear enough that you can see the road underneath it. It makes the road look wet. Any time the temperature is below freezing and the road looks wet, watch out for black ice.

Vehicle icing. An easy way to check for ice is to open the window and feel the front of the mirror, mirror support, or antenna. If there's ice on these, the road surface is probably starting to ice up.

Just after rain begins. Right after it starts to rain, the water mixes with oil left on the road by vehicles. This makes the road very slippery. If the rain continues, it will wash the oil away.

Hydroplaning. In some weather, water or slush collects on the road. When this happens, your vehicle can hydroplane. It's like water skiing: the tires lose their contact with the road and have little or no traction. You may not be able to steer or brake. You can regain control by releasing the accelerator and pushing in the clutch. This will slow your vehicle and let the wheels turn freely. If the vehicle is hydroplaning, do not use the brakes to slow down. If the drive wheels start to skid, push in the clutch to let them turn freely.

It does not take a lot of water to cause hydroplaning. Hydroplaning can occur at speeds as low as 30 mph if there is a lot of water. Hydroplaning is more likely if tire pressure is low or the tread is worn. (The grooves in a tire carry away the water; if they aren't deep they don't work well.) Be especially careful driving through puddles. The water is often deep enough to cause hydroplaning.

- ***Speed and Curves***

Drivers must adjust their speed for curves in the road. If you take a curve too fast, two things can happen. The wheels can lose their traction and continue straight ahead, so you skid off the road. Or, the wheels may keep their traction and the vehicle rolls over. Tests have shown that trucks with a high center of gravity can roll over at the posted speed limit for a curve.

Slow to a safe speed **before** you enter a curve. Braking in a curve is dangerous because it is easier to lock the wheels and cause a skid. Slow down as needed. Don't ever exceed the posted speed limit for the curve. Be in a gear that will let you accelerate slightly in the curve. This will help you keep control.

- ***Speed and Distance Ahead***

You should always be able to stop within the distance you can see ahead. Fog, rain or other conditions may require that you slow down to be able to stop in the distance you can see. At night, you can't see as far with low beams as you can with high beams. When you must use low beams, slow down.

- ***Speed and Traffic Flow***

When you're driving in heavy traffic, the safest speed is the speed of other vehicles. Vehicles going the same direction at the same speed are not likely to run into one another. Drive at the speed of the traffic, if you can without going at an illegal or unsafe speed. Keep a safe following distance.

The main reason drivers exceed speed limits is to save time. But anyone trying to drive faster than the speed of traffic will not be able to save much time. The risks involved are not worth it. If you go faster than the speed of other traffic:

- You'll have to keep passing other vehicles. This increases the chance of a crash.
- It is more tiring. Fatigue increases the chance of a crash.

Going with the flow of traffic is safer, and easier.

- ***Speed on Downgrades***

Going **slow** is the most important thing in going down long steep hills safely. If you do not go slowly enough, your brakes can become so hot they won't slow you down. Shift your transmission to a low gear **before** starting down the grade. Pay attention to signs warning of long downhill grades, and check your brakes before starting down the hill. Use a light, steady pressure on the brake pedal.

Going down steep hills safely is discussed more in "Mountain Driving." Read that section carefully.

Test Your Knowledge
1. How far ahead does the manual say you should look?
2. What are two main things to look for ahead?
3. What's your most important way to see to the sides and rear?
4. What does "communicating" mean in safe driving?
5. Where should your reflectors be placed when stopped on a divided highway?
6. What three things add up to total stopping distance?
7. If you go twice as fast, will your stopping distance increase by twice or by four times?
8. Empty trucks have the best braking. True or false?
9. What is hydroplaning?
10. What is "black ice?"
These questions may be on the test. If you can't answer all, reread Sections 2-4, 2-5, and 2-6 .

2.7 Managing Space

To be a safe driver, you need space all around your vehicle. When things go wrong, space gives you time to think and to take action.

To have space available when something goes wrong, you need to **manage** space. While this is true for all drivers, it is very important for large vehicles. They take up more space and they require more space for stopping and turning.

Space Ahead

Of all the space around your vehicle, it is the area ahead of the vehicle -- the space you're driving into -- that is most important.

The Need for Space Ahead. You need space ahead in case you must suddenly stop. According to accident reports, the vehicle that trucks and buses most often run into is the one in front of them. The most frequent cause is **following too closely**. Remember, if the vehicle ahead of you is smaller than yours, it can probably stop faster than you can. You may crash if you are following too closely.

How Much Space? How much space should you keep in front of you? One good rule says you need at least one second for each 10 feet of vehicle length at speeds below 40 mph. At greater speeds, you must add one second for safety. For example, if you are driving a 40-foot vehicle, you should leave 4 seconds between you and the vehicle ahead. In a 60-foot rig, you'll need 6 seconds. Over 40 mph, you'd need 5 seconds for a 40-foot vehicle and 7 seconds for a 60-foot vehicle.

To know how much space you have, wait until the vehicle ahead passes a shadow on the road, a pavement marking, or some other clear landmark. Then count off the seconds like this: "one thousand-and-one, one thousand-and-two" and so on, until you reach the same spot. Compare your count with the rule of one second for every 10 feet of length. If you are driving a 40 foot truck and only counted up to 2 seconds, you're too close. Drop back a little and count again until you have 4 seconds of following distance (or 5 seconds, if you're going over 40 mph). After a little practice, you will know how far back you should be. Remember to add one second for speeds above 40 mph. Also remember that when the road is slippery, you need **much more space** to stop.

Space Behind

You can't stop others from following you too close. But there are things you can do to make it safer.

- Stay to the right.
- Deal with tailgaters safely.

Stay to the Right. Heavy vehicles are often tailgated when they can't keep up with the speed of traffic. This often happens when you're going uphill. If a heavy load is slowing you down, stay in the right lane if you can. Going uphill, you should not pass another slow vehicle unless you can get around quickly and safely.

Dealing with Tailgaters Safely. In a large vehicle, it's often hard to see whether a vehicle is close behind you. You may be tailgated:

- When you are traveling slowly. Drivers trapped behind slow vehicles often follow closely.
- In bad weather. Many car drivers follow large vehicles closely during bad weather, especially when it is hard to see the road ahead.

If you find yourself being tailgated, here are some things you can do to reduce the chances of a crash:

- Avoid quick changes. If you have to slow down or turn, signal early and reduce speed very gradually.
- Increase your following distance. Opening up room in front of you will help you to avoid having to make sudden speed or direction changes. It also makes it easier for the tailgater to get around you.
- Don't speed up. It's safer to be tailgated at a low speed than a high speed.
- Avoid tricks. Don't turn on your tail lights or flash your brake lights. Follow the suggestions above.

Space to the Sides

Commercial vehicles are often wide and take up most of a lane. Safe drivers will manage what little space they have. You can do this by keeping your vehicle centered in your lane, and avoid driving alongside others.

Staying Centered in a Lane. You need to keep your vehicle centered in the lane to keep safe clearance on either side. If your vehicle is wide, you have little room to spare.

Traveling Next to Others. There are two dangers in traveling alongside other vehicles:

- Another driver may change lanes suddenly and turn into you.
- You may be trapped when **you** need to change lanes.

Find an open spot where you aren't near other traffic. When traffic is heavy, it may be hard to find an open spot. If you must travel near other vehicles, try to keep as much space as possible between you and them. Also, drop back or pull forward so that you are sure the other driver can see you.

Strong Winds. Strong winds make it difficult to stay in your lane. The problem is usually worse for lighter vehicles. This problem can be especially bad coming out of tunnels. Don't drive alongside others if you can avoid it.

Space Overhead

Hitting overhead objects is a danger. Make sure you always have overhead clearance.

- Don't assume that the heights posted at bridges and overpasses are correct. Repaving or packed snow may have reduced the clearances since the heights were posted.
- The weight of a cargo van changes its height. An empty van is higher than a loaded one. That you got under a bridge when you were loaded does not mean that you can do it when you are empty.
- If you doubt you have safe space to pass under an object, go slowly. If you aren't sure you can make it, take another route. Warnings are often posted on low bridges or underpasses, but sometimes they are not.
- Some roads can cause a vehicle to tilt. There can be a problem clearing objects along the edge of the road, such as signs or trees. Where this is a problem, drive a little closer to the center of the road.
- Before you back into an area, get out and check for overhanging objects, such as trees, branches or electric wires. It's easy to miss seeing them while you are backing. (Also check for other hazards at the same time.)

Many drivers forget about the space under their vehicles. That space can be very small when a vehicle is heavily loaded. Railroad tracks can stick up several inches. This is often a problem on dirt roads and in unpaved yards where the surface around the tracks can wear away. Don't take a chance on getting hung up halfway across. Drainage channels across roads can cause the end of some vehicles to drag. Cross such depressions carefully.

· ***Space Below***

The space around a truck or bus is important in turns. Because of wide turning and offtracking, large vehicles can hit other vehicles or objects during turns.

· ***Space for Turns***

Right Turns. Here are some rules to help prevent right-turn crashes:

- Turn slowly to give yourself and others more time to avoid problems.
- If you are driving a truck or bus that cannot make the right turn without swinging into another lane, turn wide as you **complete** the turn, as shown in Figure 2-11. Keep the rear of your vehicle close to the curb. This will stop other drivers from passing you on the right.
- Don't turn wide to the left as you start the turn, as shown in Figure 2-12. A following driver may think you are turning left and try to pass you on the right. You may crash into the other vehicle as you complete your turn.
- If you must cross into the oncoming lane to make a turn, watch out for vehicles coming toward you. Give them room to go by or to stop. However, don't back up for them, because you might hit someone behind you.

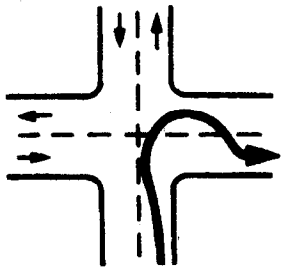

Figure 2-11
Do This.

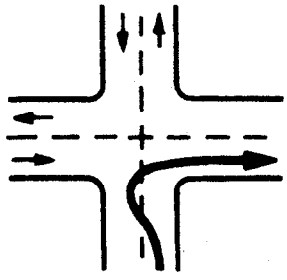

Figure 2-12.
Don't Do This!

Left Turns. On a left turn, make sure you have reached the center of the intersection before you start the left turn. If you turn too soon, the left side of your vehicle may hit another vehicle because of offtracking.

If there are two turning lanes, always take the righthand turn lane, as shown in Figure 2-13. Don't start in the inside lane because you may have to swing right to make the turn. Drivers on your right may be hard for you to see. You may crash into them.

Space Needed to Cross or Enter Traffic

Be aware of the size and weight of your vehicle when you cross or enter traffic. Here are some important things to keep in mind:

- Because of slow acceleration and the space large vehicles require, you may need a much larger gap to enter traffic than you would in a car.
- Acceleration varies with the load. Allow more room if your vehicle is heavily loaded.
- Before you start across a road, make sure you can get all the way across before traffic reaches you.

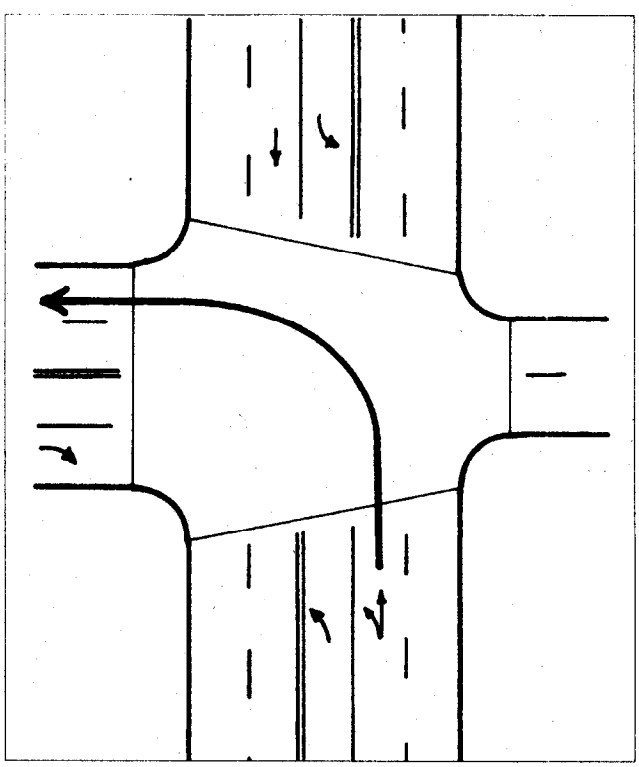

Figure 2-13
If there are two left turn lanes, use the right hand lane.

Test Your Knowledge
1. How do you find out how many seconds of following distance space you have? 2. If you are driving a 30 foot vehicle at 55 m.p.h. how many seconds of following distance should you allow? 3. You should decrease your following distance if somebody is following you too closely. True or false? 4. If you swing wide to the left before turning right, another driver may try to pass you on the right. True or false?
These questions may be on the test. If you can't answer all, reread 2.7: Managing Space.

2.8 Driving at Night

· ***It's More Dangerous***

You are at greater risk when you drive at night. Drivers can't see hazards as soon as in daylight, so they have less time to respond. Drivers caught by surprise are less able to avoid a crash.

The problems of night driving involve the driver, the roadway, and the vehicle. We will discuss each of these factors.

· ***Driver Factors***

Vision. People can't see as sharply at night or in dim light. Also, the eyes need time to adjust to seeing in dim light. Most people have noticed this when walking into a dark movie theater.

Glare. Drivers can be blinded for a short time by bright light. It takes time to recover from this blindness. Older drivers are especially bothered by glare. Most people have been temporarily blinded by camera flash units or by the high beams of an oncoming vehicle. It can take several seconds to recover from glare. Even two seconds of glare blindness can be dangerous. A vehicle going 55 mph will travel more than half the distance of a football field during that time. Don't look directly at bright lights when driving. Look at the right side of the road. Watch the sidelines when someone coming toward you has very bright lights.

Fatigue and Lack of Alertness. Fatigue (being tired) and lack of alertness are bigger problems at night. The body's need for sleep is beyond a person's control. Most people are less alert at night, especially after midnight. This is particularly true if you have been driving for a long time. Drivers may not see hazards as soon or react as quickly, so the chance of a crash is greater. If you are sleepy, the only safe cure is to get off the road and get some sleep. If you don't, you risk your life and the lives of others.

· ***Roadway Factors***

Poor Lighting. In the daytime there is usually enough light to see well. This is not true at night. Some areas may have bright street lights, but many areas will have poor lighting. On most roads you will probably have to depend entirely on your headlights.

Less light means you will not be able to see hazards as well as in daytime. Road users who do not have lights are hard to see. There are many accidents at night involving pedestrians, joggers, bicyclists, and animals.

Even when there are lights, the road scene can be confusing. Traffic signals and hazards can be hard to see against a background of signs, shop windows, and other lights.

Drive slower when lighting is poor or confusing. Drive slowly enough to be sure you can stop in the distance you can see ahead.

Drunk Drivers. Drunk drivers and drivers under the influence of drugs are a hazard to themselves and to you. Be especially alert around the closing times for bars and taverns. Watch for drivers who have trouble staying in their lane or maintaining speed, stop without reason, or show other signs of being under the influence of alcohol or drugs.

· ***Vehicle Factors***

Headlights. At night your headlights will usually be the main source of light for you to see and for others to see you. You can't see nearly as much with your headlights as you can see in the daytime. With low beams you can see ahead about 250 feet and with high beams

about 350-500 feet. You must adjust your speed to keep your stopping distance within your sight distance. This means going slow enough to be able to stop within the range of your headlights. Otherwise, by the time you see a hazard, you will not have time to stop.

Night driving can be more dangerous if you have problems with your headlights. Dirty headlights may give only half the light they should. This cuts down your ability to see, and makes it harder for others to see you. Make sure your lights are clean and working. Headlights can be out of adjustment. If they don't point in the right direction, they don't give you a good view and they can blind other drivers. Have a qualified person make sure they are adjusted properly.

Other Lights. In order for you to be seen easily, the following must be clean and working properly:

- Reflectors.
- Marker lights.
- Clearance lights.
- Tail lights.
- Identification lights.

Turn Signals and Brake Lights. At night your turn signals and brake lights are even more important for telling other drivers what you intend to do. Make sure you have clean, working turn signals and stop lights.

Windshields and Mirrors. It is more important at night than in the daytime to have clean windshields and mirrors. Bright lights at night can cause dirt on your windshield or mirrors to create a glare of its own, blocking your view. Most people have experienced driving toward the sun just as it has risen or is about to set and found that they can barely see through a windshield that seemed to look o.k. in the middle of the day. Clean your windshield on the inside and outside for safe driving at night.

· ***Night Driving Procedures***

Pre-Trip Procedures. Make sure you are rested and alert. If you are drowsy, **sleep** before you drive! Even a nap can save your life or the lives of others. If you wear eyeglasses, make sure they are clean and unscratched. Don't wear sun glasses at night. Do a complete pre-trip inspection of your vehicle. Pay attention to checking all lights and reflectors and cleaning those you can reach.

Avoid blinding others. Glare from your headlights can cause problems for drivers coming towards you. They can also bother drivers going in the same direction you are, when your lights shine in their rearview mirrors. Dim your lights before they cause glare for other drivers. Dim your lights within 500 feet of an oncoming vehicle and when following another vehicle within 500 feet.

Avoid glare from oncoming vehicles. Do not look directly at lights of oncoming vehicles. Look slightly to the right at a right lane or edge marking if available. If other drivers don't put their low beams on, don't try to "get back at them" by putting your own high beams on. This increases glare for oncoming drivers and increases the chance of a crash.

Use high beams when you can. Some drivers make the mistake of always using low beams. This seriously cuts down on their ability to see ahead. Use high beams when it is safe and legal to do so. Use them when you are not within 500 feet of an approaching vehicle. Also, don't let the inside of your cab get too bright. This makes it harder to see outside. Keep the interior light off and adjust your instrument lights as low as you can and still read the gauges.

If you get sleepy, stop driving at the nearest safe place. People often don't realize how close they are to falling asleep even when their eyelids are falling shut. If you can safely do so, look at yourself in a mirror. If you look sleepy, or you just feel sleepy, **stop driving!** You are in a very dangerous condition. The only safe cure is to sleep.

2.9 Driving in Winter

Vehicle Checks

Make sure your vehicle is ready before driving in winter weather. You should make a regular pre-trip inspection, paying extra attention to the following items.

Coolant Level and Antifreeze Amount. Make sure the cooling system is full and there is enough anti-freeze in the system to protect against freezing. This can be checked with a special coolant tester.

Defrosting and Heating Equipment. Make sure the defrosters work. They are needed for safe driving. Make sure the heater is working and that you know how to operate it. If you use other heaters and expect to need them (e.g., mirror heaters, battery box heaters, fuel tank heaters), check their operation.

Wipers and Washers. Make sure the windshield wiper blades are in good condition. Make sure the wiper blades press against the window hard enough to wipe the windshield clean. Otherwise they may not sweep off snow properly. Make sure the windshield washer works and there is washing fluid contained in the washer reservoir. Use windshield washer antifreeze to prevent freezing of the washer liquid. If you can't see well enough while driving (for example, if your wipers fail), stop safely and fix the problem.

Tires. Make sure you have enough tread on your tires. The drive tires must provide traction to push the rig over wet pavement and through snow. The steering tires must have traction to steer the vehicle. Enough tread is especially important in winter conditions. You should have at least 4/32 inch tread depth in every major groove on front wheels and at least 2/32 inch on other wheels. More would be better. Use a gauge to determine if you have enough tread for safe driving.

Tire Chains. You may find yourself in conditions where you can't drive without chains, even to get to a place of safety. Carry the right number of chains and extra cross links. Make sure they will fit your drive tires. Check the chains for broken hooks, worn or broken cross links, and bent or broken side chains. Learn how to put the chains on before you need to do it in snow and ice.

Lights and Reflectors. Make sure the lights and reflectors are clean. Lights and reflectors are especially important during bad weather. Check from time to time during bad weather to make sure they are clean and working right.

Windows and Mirrors. Remove any ice, snow, etc., from the windshield, windows, and mirrors before starting. Use a windshield scraper, snow brush, and windshield defroster as necessary.

Hand Holds, Steps, and Deck Plates. Remove all ice and snow from hand holds, steps, and deck plates which you must use to enter the cab or to move about the vehicle. This will reduce the danger of slipping.

Radiator Shutters and Winterfront. Remove ice from the radiator shutters. Make sure the winterfront is not closed too tightly. If the shutters freeze shut or the winterfront is closed too much, the engine may overheat and stop.

Exhaust System. Exhaust system leaks are especially dangerous when cab ventilation may be poor (windows rolled up, etc.). Loose connections could permit poisonous carbon monoxide to leak into your vehicle. Carbon monoxide gas will cause you to be sleepy. In large enough amounts it can kill you. Check the exhaust system for loose parts and for sounds and signs of leaks.

Driving

Slippery Surfaces. Drive slowly and smoothly on slippery roads. If it is very slippery you shouldn't drive at all. Stop at the first safe place.

The following are some safety guidelines.

Start gently and slowly. When first starting, get the feel of the road. Don't hurry.

Adjust turning and braking to conditions. Make turns as gentle as possible. Don't brake any harder than necessary, and don't use the engine brake or speed retarder. (They can cause the driving wheels to skid on slippery surfaces.)

Adjust speed to conditions. Don't pass slower vehicles unless necessary. Go slow and watch far enough ahead to keep a steady speed. Avoid having to slow down and speed up. Take curves at slower speeds and don't brake while in curves. Be aware that as the temperature rises to the point where ice begins to melt, the road becomes even more slippery. Slow down more.

Adjust space to conditions. Don't drive alongside other vehicles. Keep a longer following distance. When you see a traffic jam ahead, slow down or stop to wait for it to clear. Try hard to anticipate stops early and slow down gradually.

Wet Brakes. When driving in heavy rain or deep standing water, your brakes will get wet. Water in the brakes can cause the brakes to be weak, to apply unevenly, or to grab. This can cause lack of braking power, wheel lockups, pulling to one side or the other, and jackknife if you pull a trailer.

Avoid driving through deep puddles or flowing water if possible. If not, you should:

- Slow down.
- Place transmission in a low gear.
- Gently put on the brakes. This presses linings against brake drums or discs and keeps mud, silt, sand, and water from getting in.
- Increase engine RPM and cross the water while keeping light pressure on the brakes.
- When out of the water, maintain light pressure on the brakes for a short distance to heat them up and dry them out.
- Make a test stop when safe to do so. Check behind to make sure no one is following, then apply the brakes to be sure they work right. If not, dry out further as described above. (CAUTION: Do not apply too much brake pressure and accelerator at the same time or you can overheat brake drums and linings.)

2.10 Driving in Very Hot Weather

- ***Vehicle Checks***

Do a normal pre-trip inspection but pay special attention to the following items.

Tires. Check the tire mounting and air pressure. Inspect the tires every two hours or every 100 miles when driving in very hot weather. Air pressure increases with temperature. Do not let air out or the pressure will be too low when the tires cool off. If a tire is too hot to touch, remain stopped until the tire cools off. Otherwise the tire may blow out or catch fire. Pay special attention to recapped or retreaded tires. Under high temperatures the tread may separate from the body of the tire.

Engine Oil. The engine oil helps keep the engine cool, as well as lubricating it. Make sure there is enough engine oil. If you have an oil temperature gauge, make sure the temperature is within the proper range while you are driving.

Engine Coolant. Before starting out, make sure the engine cooling system has enough water and antifreeze according to the engine manufacturer's directions. (Antifreeze helps the engine under hot conditions as well as cold conditions.) When driving, check the water temperature or coolant temperature gauge from time to time. Make sure that it remains in the normal range. If the gauge goes above the highest safe temperature, there may be something wrong that could lead to engine failure and possibly fire. Stop driving as soon as safely possible and try to find out what is wrong.

Some vehicles have sight glasses or see-through coolant overflow containers or coolant recovery containers. These permit you to check the coolant level while the engine is hot. If the container is not part of the pressurized system, the cap can be safely removed and coolant added even when the engine is at operating temperature. **Never remove the radiator cap or any part of the pressurized system until the system has cooled.** Steam and boiling water can spray under pressure and cause severe burns. If you can touch the radiator cap with your bare hand, it is probably cool enough to open.

If coolant has to be added to a system without a recovery tank or overflow tank, follow these steps.

- Shut engine off.
- Wait until engine has cooled.
- Protect hands (use gloves or a thick cloth).
- Turn radiator cap slowly to the first stop, which releases the pressure seal.
- Step back while pressure is released from cooling system.
- When all pressure has been released, press down on the cap and turn it further to remove it.
- Visually check level of coolant and add more coolant if necessary.
- Replace cap and turn all the way to the closed position.

Engine Belts. Learn how to check V-belt tightness on your vehicle by pressing on the belts. Loose belts will not turn the water pump and/or fan properly. This will result in overheating. Also check belts for cracking, or other signs of wear.

Hoses. Make sure coolant hoses are in good condition. A broken hose while driving can lead to engine failure and even fire.

Driving

Watch for Bleeding Tar. Tar in the road pavement frequently rises to the surface in very hot weather. Spots where tar "bleeds" to the surface are very slippery.

Go Slow Enough to Prevent Overheating. High speeds create more heat for tires and the engine. In desert conditions the heat may build up to the point where it is dangerous. The heat will increase chances of tire failure, or even fire, and engine failure.

Test Your Knowledge
1. You should use low beams whenever you can. True or false?
2. What should you do before you drive if you are drowsy?
3. What effects can wet brakes cause? How can you avoid these problems?
4. You should let air out of hot tires so the pressure goes back to normal. True or false?
5. You can safely remove the radiator cap as long as the engine isn't overheated. True or false?
These questions may be on the test. If you can't answer all, reread 2.8, 2.9, and 2.10.

2.11 Mountain Driving

In mountain driving, the force of gravity plays a major role. If you have a heavy load, you will have to use lower gears and go slower to climb hills. In coming down steep hills, gravity will tend to speed you up. You must go slow enough that your brakes can hold you back without getting too hot. If the brakes become too hot, they may start to "fade." This means that you have to apply them harder and harder to get the same stopping power. If the brakes continue to be used hard, they can continue to fade until you can't slow down or stop at all. These dangers can be avoided by going slow when going down hill.

Use of Gears Going Down Hill

No matter what the size of your vehicle, going down long, steep grades can cause your brakes to fail if you go too fast. Using lower gears will help you keep from going too fast. Lower gears allow engine compression and friction to help slow the vehicle. This is true whether you have an automatic transmission or a manual transmission.

If you do have a large vehicle with a manual transmission, don't wait until you have started down the hill to shift down. You might get hung up in neutral and would lose the benefit of engine braking. You would find yourself coasting, which would be illegal and dangerous. **Be in the right gear before starting down the hill.**

With older trucks, a rule for choosing gears was to use the same gear going down a hill that you would need to climb the hill. However, new trucks have low friction parts and streamlined shapes for fuel economy. They may also have more powerful engines. This means they can go up hills in higher gears and have less friction and air drag to hold them back going down hills. For that reason, drivers of modern trucks may have to use **lower gears going down** a hill than would be required to go up the hill. Find out what is right for your vehicle.

Proper Braking

When going down hill, brakes will always heat up. They are designed so brake shoes or pads rub against the brake drum or disks to slow the vehicle, which creates heat. Brakes are designed to take a lot of heat. However, brakes can be made to fail from excessive heat by attempting to slow down from too high a speed too many times or too quickly. Brakes will fade (have less stopping power) when they get very hot, and they can get to the point where they will no longer slow the vehicle.

The right way to use your brakes for long downhill grades is to go slow enough that a fairly light use of the brakes will keep your speed from increasing. If you go slow enough, the brakes will be able to get rid of the heat and they won't get too hot.

Some people believe that letting up on the brakes from time to time will allow them to cool enough so they don't become overheated. Tests have proven this is **not** true. Brake drums cool very slowly, so the amount of cooling between applications is not enough to prevent overheating. This type of braking requires heavier brake pressures than steady application does. Heavy pressure on the brakes from time to time builds up more heat than light continuous pressure does. Therefore, select the right gear, go slow enough, and maintain a lighter, steadier use of the brakes.

Escape Ramps

Escape ramps have been built on many steep mountain grades. Escape ramps are made to stop runaway vehicles safely without injuring drivers and passengers. Escape ramps use a long bed of loose soft material (pea gravel) to slow a runaway vehicle, sometimes in combination with an upgrade.

Know escape ramp locations on your route. Signs show drivers where ramps are located. Escape ramps save lives, equipment, and cargo. Use them if you lose your brakes.

2.12 Seeing Hazards

Importance of Seeing Hazards

What is a Hazard? A hazard is any road condition or other road user (driver, bicyclist, pedestrian) that is a possible danger. For example, a car in front of you is headed towards the freeway exit, but his brake lights come on and he begins braking hard. This could mean that the driver is uncertain about taking the offramp. He might suddenly return to the highway. This car is a **hazard**. If the driver of the car cuts in front of you, it is no longer just a hazard; it is an emergency.

Seeing Hazards Lets You Be Prepared. You will have more time to act if you see hazards before they become emergencies. In the example above, you might make a lane change or slow down to prevent a crash if the car suddenly cuts in front of you. Seeing this hazard gives you time to check your mirrors and signal a lane change. Being prepared reduces the danger. A driver who did not see the hazard until the slow car pulled back on the highway in front of him would have to do something very suddenly. Sudden braking or a quick lane change is much more likely to lead to a crash.

Learning to See Hazards. There are often clues that will help you see hazards. The more you drive, the better you can get at seeing hazards. This section will talk about hazards that you should be aware of.

Hazardous Roads

Slow down and be very careful if you see any of the following road hazards.

Work Zones. When people are working on the road it is a hazard. There may be narrower lanes, sharp turns, or uneven surfaces. Other drivers are often distracted and drive unsafely. Workers and construction vehicles may get in the way. Drive slowly and carefully near work zones. Use your 4-way flashers or brake lights to warn drivers behind you.

Drop Off. Sometimes the pavement drops off sharply near the edge of the road. Driving too near the edge can tilt your vehicle toward the side of the road. This can cause the top of your vehicle to hit roadside objects (signs, tree limbs). Also, it can be hard to steer as you cross the drop off, going off the road or coming back on.

Foreign Objects. Things that have fallen on the road can be hazards. They can be a danger to your tires and wheel rims. They can damage electrical and brake lines. They can be caught between dual tires and cause severe damage. Some obstacles which appear to be harmless can be very dangerous. For example, cardboard

boxes may be empty, but they may also contain some solid or heavy material capable of causing damage. The same is true of paper and cloth sacks. It is important to remain alert for objects of all sorts, so you can see them early enough to avoid them without making sudden, unsafe moves.

Offramps/Onramps. Freeway and turnpike exits can be particularly dangerous for commercial vehicles. Offramps and onramps often have speed limit signs posted. Remember, these speeds may be safe for automobiles, **but may not be safe for larger vehicles or heavily loaded vehicles**. Exits which go downhill and turn at the same time can be especially dangerous. The downgrade makes it difficult to reduce speed. Braking and turning at the same time can be a dangerous practice. Make sure you are going slow enough before you get on the curved part of an offramp or onramp.

Drivers Who Are Hazards

In order to protect yourself and others, you must know when other drivers may do something hazardous. Some clues to this type of hazard are discussed below:

Blocked Vision. People who can't see others are a very dangerous hazard. Be alert for drivers whose vision is blocked. Vans, loaded station wagons, and cars with the rear window blocked are examples. Rental trucks should be watched carefully. Their drivers are often not used to the limited vision they have to the sides and rear of the truck. In winter, vehicles with frosted, ice covered, or snow covered windows are hazards.

Vehicles may be partly hidden by blind intersections or alleys. If you only can see the rear or front end of a vehicle but not the driver, then he or she can't see you. Be alert because he / she may back out or enter into your lane. Always be prepared to stop.

Delivery trucks can present a hazard. The driver's vision is often blocked by packages, or vehicle doors. Drivers of step vans, postal vehicles, and local delivery vehicles often are in a hurry and may suddenly step out of their vehicle or drive their vehicle into the traffic lane.

Parked vehicles can be hazards, when the people start to get out. Or, they may suddenly start up and drive into your way. Watch for movement inside the vehicle or movement of the vehicle itself that shows people are inside. Watch for brake lights or backup lights, exhaust, and other clues that a driver is about to move.

Be careful of a stopped bus. Passengers may cross in front of or behind the bus, and they often can't see you.

Pedestrians and bicyclists can also be hazards. Walkers, joggers and bicyclists may be on the road with their back to the traffic, so they can't see you. Sometimes, they wear portable stereos with head sets, so they can't hear you either. This can be dangerous. On rainy days, pedestrians may not see you because of hats or umbrellas. They may be hurrying to get out of the rain and may not pay attention to the traffic.

Distractions. People who are distracted are hazards. Watch for where they are looking. If they are looking elsewhere, they can't see you. But be alert even when they are looking at you. They may believe that they have the right of way.

Children. Children tend to act quickly without checking traffic. Children playing with one another may not look for traffic and are a serious hazard.

Talkers. Drivers or pedestrians talking to one another may not be paying close attention to the traffic.

Workers. People working on or near the roadway are a hazard clue. The work creates a distraction for other drivers and the workers themselves may not see you.

Ice cream truck. Someone selling ice cream is a hazard clue. Children may be nearby and may not see you.

Disabled vehicle. Drivers changing a tire or fixing an engine often do not pay attention to the danger that roadway traffic is to them. They are often careless. Jacked up wheels or raised hoods are hazard clues.

Accidents. Accidents are particularly hazardous. People involved in the accident may not look for traffic. Passing drivers tend to look at the accident. People often run across the road without looking. Vehicles may slow or stop suddenly.

Shoppers. People in and around shopping areas are often not watching traffic because they are looking for stores or looking into store windows.

Confused Drivers. Confused drivers often change direction suddenly or stop without warning. Confusion is common near freeway or turnpike interchanges and major intersections. Tourists unfamiliar with the area can be very hazardous. Clues to tourists include car-top luggage and out-of-state license plates. Unexpected actions (stopping in the middle of a block, changing lanes for no apparent reason, backup lights suddenly going on) are clues to confusion. Hesitation is another clue, including driving very slowly, using brakes often, or stopping in the middle of an intersection. You may also see drivers who are looking at street signs, maps, and house numbers. These drivers may not be paying attention to you.

Slow Drivers. Motorists who fail to maintain normal speed are hazards. Seeing slow moving vehicles early can prevent a crash. Some vehicles by their nature are slow and seeing them is a hazard clue (mopeds, farm machinery, construction machinery, tractors, etc.). Some of these will have the "slow moving vehicle" symbol to warn you. This is a red triangle with an orange center. Watch for it.

Drivers signaling a turn may be a hazard. Drivers signaling a turn may slow more than expected or stop. If they are making a tight turn into an alley or driveway they may go very slow. If they are blocked by pedestrians or other vehicles they may have to stop on the roadway. Vehicles turning left may have to stop for oncoming vehicles.

Drivers in a Hurry. Drivers may feel your commercial vehicle is preventing them from getting where they want to go on time. Such drivers may pass you without a safe gap in the oncoming traffic, cutting too close in front of you. Drivers entering the road may pull in front of you in order to avoid being stuck behind you, causing you to brake. Be aware of this and watch for drivers who are in a hurry.

Impaired Drivers. Drivers who are sleepy, have had too much to drink, on drugs, or who are ill are hazards. Some clues to these drivers are:

- Weaving across the road or drifting from one side to another.
- Leaving the road (dropping right wheels onto the shoulder, or bumping across a curb in a turn).
- Stopping at the wrong time (stopping at a green light, or waiting for too long at a stop).
- Open window in cold weather.
- Speeds up or slows down suddenly, driving too fast or too slow.

Be alert for drunk drivers and sleepy drivers late at night.

Driver Body Movement As A Clue. Drivers look in the direction they are going to turn. You may sometimes get a clue from a driver's head and body movements that a driver may be going to make a turn even though the turn signals aren't on. Drivers making over-the-shoulder checks may be going to change lanes. These clues are most easily seen in motorcyclists and bicyclists. Watch other road users and try to tell whether they might do something hazardous.

Conflicts. You are in conflict when you have to change speed and/or direction to avoid hitting someone. Conflicts occur at intersections where vehicles meet, at merges (such as turnpike onramps) and where there are needed lane changes (such as the end of a lane, forcing a move to another lane of traffic). Other situations include slow moving or stalled traffic in a traffic lane, and accident scenes. Watch for other drivers who are in conflict because they are a hazard to you. When they react to this conflict, they may do something that will put them in conflict with you.

Always Have a Plan

You should always be looking for hazards. Continue to learn to see hazards on the road. However, don't forget why you are looking for the hazards: they may turn into **emergencies**. You look for the hazards in order to have time to **plan a way out of any emergency**. When you see a hazard, think about the emergencies that could develop and figure out what you would do. Always be prepared to take action based on your plans. In this way, you will be a prepared, defensive driver who will improve not only your own safety but the safety of all road users.

Test Your Knowledge
1. Why should you be in the right gear **before** starting down a hill?
2. Why do new trucks use lower gears going down a hill than coming up?
3. The key to preventing brake fade is to go slow enough. True or false?
4. What is a hazard?
5. Why make emergency plans when you see a hazard?
These questions may be on the test. If you can't answer all, reread Sections 2.11 and 2.12.

2.13 Emergencies

Traffic emergencies occur when two vehicles are about to collide. **Vehicle** emergencies occur when tires, brakes or other critical parts fail. Following the safety practices in this manual can help prevent emergencies. But if an emergency does happen, your chances of avoiding a crash depend upon how well you take action. Actions you can take are discussed below.

• *Steering to Avoid a Crash*

Stopping is not always the safest thing to do in an emergency. When you don't have enough room to stop, you may have to steer away from what's ahead. Remember, you can almost always turn to miss an obstacle more quickly than you can stop. (However, top-heavy vehicles and tractors with multiple trailers may flip over.)

Keep Both Hands on the Steering Wheel. In order to turn quickly, you must have a firm grip on the steering wheel with both hands. The best way to have both hands on the wheel if there is an emergency is to keep them there all the time.

How to Turn Quickly and Safely. A quick turn can be made safely, if it's done the right way. Here are some points that safe drivers use:

- Do **not** apply the brake while you are turning. It's very easy to lock your wheels while turning. If that happens, you may skid out of control.
- **Do not** turn any more than needed to clear whatever is in your way. The more sharply you turn, the greater the chances of a skid or rollover.
- Be prepared to "countersteer," that is, to turn the wheel back in the other direction, once you've passed whatever was in your path. Unless you are prepared to countersteer, you won't be able to do it quickly enough. You should think of emergency steering and countersteering as two parts of one driving action.

Where to Steer. If an oncoming driver has drifted into your lane, a move to your right is best. If that driver realizes what has happened, the natural response will be to return to his or her own lane.

If something is blocking your path, the best direction to steer will depend on the situation.

- If you have been using your mirrors, you'll know which lane is empty and can be safely used.
- If the shoulder is clear, going right may be best. No one is likely to be driving on the shoulder but someone may be passing you on the left. You will know if you have been using your mirrors.
- If you are blocked on both sides, a move to the right may be best. At least you won't force anyone into an opposing traffic lane and a possible head-on collision.

Leaving the Road. In some emergencies, you may have to drive off the road. It may be less risky than facing a collision with another vehicle.

Most shoulders are strong enough to support the weight of a large vehicle and, therefore, offer an available escape route. Here are some guidelines, if you do leave the road.

Avoid Braking. If possible, avoid using the brakes until your speed has dropped to about 20 mph. Then brake very gently to avoid skidding on a loose surface.

Keep one set of wheels on pavement if possible. This helps to maintain control.

Stay on the Shoulder. If the shoulder is clear, stay on it until your vehicle has come to a stop. Signal and check your mirrors before pulling back onto the road.

Returning to the Road. If you are forced to return to the road before you can stop, use the following procedure:

- Hold the wheel tightly and turn sharply enough to get right back on the road safely. Don't try to edge gradually back on the road. If you do, your tires might grab unexpectedly and you could lose control.
- When both front tires are on the paved surface, **countersteer** immediately. The two turns should be made as a single "steer-countersteer" move.

• How to Stop Quickly and Safely

If somebody suddenly pulls out in front of you, your natural response is to hit the brakes. This is a good response if there's enough distance to stop and you use the brakes correctly.

You should brake in a way that will keep your vehicle in a straight line and allow you to turn if it becomes necessary. You can use the "controlled braking" method or the "stab braking" method.

Controlled braking. With this method, you apply the brakes as hard as you can **without** locking the wheels. Keep steering wheel movements very small while doing this. If you need to make a larger steering adjustment or if the wheels lock, release the brakes. Reapply the brakes as soon as you can.

Stab braking.

- Apply your brakes all the way.
- Release brakes when wheels lock up.
- As soon as the wheels start rolling, apply the brakes fully again. (It can take up to one second for the wheels to start rolling after you release the brakes. If you reapply the brakes before the wheels start rolling, the vehicle won't straighten out.)

Don't Jam on the Brakes. Emergency braking does not mean pushing down on the brake pedal as hard as you can. That will only keep the wheels locked up and cause a skid. If the wheels are skidding, you cannot control the vehicle.

• Brake Failure

Brakes kept in good condition rarely fail. Most **hydraulic** brake failures occur for one of two reasons: (Air brakes are discussed in Section 5.)

- Loss of hydraulic pressure.
- Brake fade on long hills.

Loss of Hydraulic Pressure. When the system won't build up pressure, the brake pedal will feel spongy or go to the floor. Here are some things you can do:

Downshift. Putting the vehicle into a lower gear will help to slow the vehicle.

Pump the brakes. Sometimes pumping the brake pedal will generate enough hydraulic pressure to stop the vehicle.

Use the parking brake. The parking or emergency brake is separate from the hydraulic brake system. Therefore, it can be used to slow the vehicle. However, be sure to press the release button or pull the release lever at the same time you use the emergency brake so you can adjust the brake pressure and keep the wheels from locking up.

Find an escape route. While slowing the vehicle, look for an escape route—an open field, side street or escape ramp. Turning uphill is a good way to slow and stop the vehicle. Make sure the vehicle does not start rolling backward after you stop. Put it in low gear, apply the parking brake, and if necessary roll back into some obstacle that will stop the vehicle.

Brake Failure on Downgrades. Going slow enough and braking properly will almost always prevent brake failure on long downgrades. Once the brakes have failed, however, you are going to have to look outside your vehicle for something to stop it.

Your best hope is an **escape ramp**. If there is one, there'll be signs telling you about it. Use it. Ramps are usually located a few miles from the top of the downgrade. Every year, hundreds of drivers avoid injury to themselves or damage to their vehicles by using escape ramps. Some escape ramps use soft gravel that resists the motion of the vehicle and brings it to a stop. Others turn uphill, using the hill to stop the vehicle and soft gravel to hold it in place.

Any driver who loses brakes going downhill should use an escape ramp if it's available. If you don't use it, your chances of having a serious crash may be much worse.

If no escape ramp is available, take the least hazardous escape route you can — such as an open field, or a side road that flattens out or turns uphill. Make the move as soon as you know your brakes don't work. The longer you wait, the faster the vehicle will go and the harder it will be to stop.

- ***Tire Failure***

There are four important things that safe drivers do to handle a tire failure safely:

- Be aware that a tire has failed.
- Hold the steering wheel firmly.
- Stay off the brake.
- After stopping, check all the tires.

Recognize Tire Failure. Quickly knowing you have a tire failure will let you have more time to react. Having just a few seconds to remember what it is you're supposed to do can help you. The major signs of tire failure are:

Sound. The loud "bang" of a blowout is an easily recognized sign. Because it can take a few seconds for your vehicle to react, you might think it was some other vehicle. But any time you hear a tire blow, you'd be safest to assume it was yours.

Vibration. If the vehicle thumps or vibrates heavily, it may be a sign that one of the tires has gone flat. With a rear tire, that may be the only sign you get.

Feel. If the steering feels "heavy," it is probably a sign that one of the front tires has failed. Sometimes, failure of a rear tire will cause the vehicle to slide back and forth or "fishtail." However, dual rear tires usually prevent this.

Any of these signs is a warning of possible tire failure. You should do the following things.

Hold the Steering Wheel Firmly. If a front tire fails, it can twist the steering wheel out of your hand. The only way to prevent this is to keep a firm grip on the steering wheel with both hands at all times.

Stay Off the Brake. It's natural to want to brake in an emergency. However, braking when a tire has failed could cause loss of control. Unless you're about to run into something, stay off the brake until the vehicle has slowed down. Then brake very gently, pull off the road, and stop.

Check the Tires. After you've come to a stop, get out and check all the tires. Do this even if the vehicle seems to be handling all right. If one of your dual tires goes, the only way you may know it is by getting out and looking at it.

2.14 Skid Control and Recovery

A skid happens whenever the tires lose their grip on the road. This is caused in one of four ways:

Overbraking. Braking too hard and locking up the wheels. Skids also can occur when using the speed retarder when the road is slippery.

Oversteering. Turning the wheels more sharply than the vehicle can turn.

Overacceleration. Supplying too much power to the drive wheels, causing them to spin.

Driving too fast. Most serious skids result from driving too fast for road conditions. Drivers who adjust their driving to conditions don't overaccelerate and don't have to overbrake or oversteer from too much speed.

• *Drive-Wheel Skids*

By far the most common skid is one in which the rear wheels lose traction through excessive braking or acceleration. Skids caused by acceleration usually happen on ice or snow. They can be easily stopped by taking your foot off the accelerator. (If it is very slippery, push the clutch in. Otherwise the engine can keep the wheels from rolling freely and regaining traction.)

Rear wheel braking skids occur when the rear drive wheels lock. Because locked wheels have less traction than rolling wheels, the rear wheels usually slide sideways in an attempt to "catch up" with

the front wheels. In a bus or straight truck, the vehicle will slide sideways in a "spin out." With vehicles towing trailers, a drive-wheel skid can let the trailer push the towing vehicle sideways, causing a sudden jackknife. (Figure 2-14)

- ***Correcting a Drive-Wheel Braking Skid***

Do the following to correct a drive-wheel braking skid.

Stop braking. This will let the rear wheels roll again, and keep the rear wheels from sliding any further. If on ice, push in the clutch to let the wheels turn freely.

Turn quickly. When a vehicle begins to slide sideways, **quickly** steer in the direction you want the vehicle to go—down the road. You must turn the wheel quickly.

Countersteer. As a vehicle turns back on course, it has a tendency to keep right on turning. Unless you turn the steering wheel quickly the other way, you may find yourself skidding in the opposite direction.

Learning to stay off the brake, turn the steering wheel quickly, push in the clutch, and counter-steer in a skid takes a lot of practice. The best place to get this practice is on a large driving range or "skid pad."

- ***Front-Wheel Skids***

Most front-wheel skids are caused by driving too fast for conditions. Other causes are: lack of tread on the front tires, and cargo loaded so not enough weight is on the front axle. In a front-wheel skid, the front end tends to go in a straight line regardless of how much you turn the steering wheel. On a very slippery surface, you may not be able to steer around a curve or turn.

When a front-wheel skid occurs, the only way to stop the skid is to let the vehicle slow down. Stop turning and/or braking so hard. Slow down as quickly as possible without skidding.

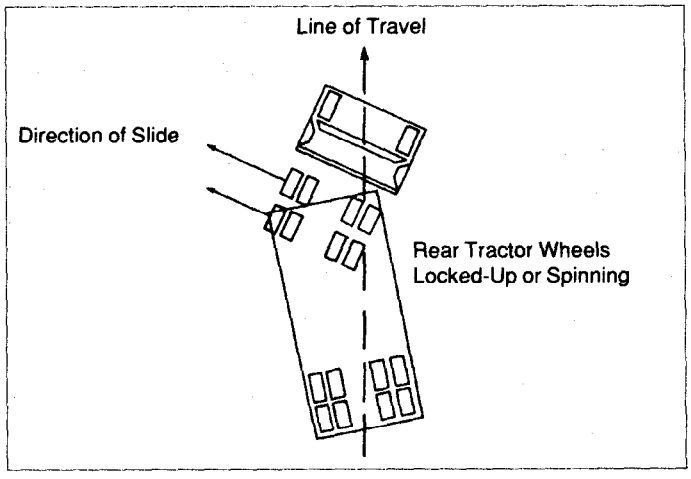

Figure 2-14
Tractor Jackknife

Test Your Knowledge
1. Stopping is not always the safest thing to do in an emergency. True or false? 2. What are some advantages of going right instead of left around an obstacle? 3. What is an "escape ramp?" 4. If a tire blows out, you should put the brakes on hard to stop quickly. True or false?
These questions may be on the test. If you can't answer all, reread Sections 2.13 and 2.14.

2.15 Accident Procedures

When you're in an accident and not seriously hurt you need to act to prevent further damage or injury. The basic steps to be taken at any accident are to:

- Protect the area.
- Notify authorities.
- Care for injured.

· *Protect the Area*

The first thing to do at an accident scene is to keep another accident from happening at the same spot. To protect the accident area:

- If your vehicle is involved in the accident, try to get it to the side of the road. This will help prevent another accident and allow traffic to move.
- If you're stopping to help, park away from the accident. The area immediately around the accident will be needed for emergency vehicles.
- Put on your flashers.
- Set out reflective triangles to warn other traffic. Make sure they can be seen by other drivers in time for them to avoid the accident.

· *Notify Authorities*

If you have a CB, put out a call over the emergency channel before you get out of your vehicle. If not, wait until after the accident scene has been properly protected, then phone or send someone to phone the police. Try to determine where you are so you can give the exact location.

· *Care for Injured*

If a qualified person is at the accident and helping the injured, stay out of the way unless asked to assist. Otherwise, do the best you can to help any injured parties. Here are some simple steps to follow in giving assistance:

- Don't move a severely injured person unless the danger of fire or passing traffic makes it necessary.
- Stop heavy bleeding by applying direct pressure to the wound.
- Keep the injured person warm.

2.16 Fires

Truck fires can cause damage and injury. Learn the causes of fires and how to prevent them. Know what to do to extinguish fires.

· *Causes of Fire*

The following are some causes of vehicle fires:

After accidents. Spilled fuel, improper use of flares.

Tires. Underinflated tires and duals that touch.

Electrical system. Short circuits due to damaged insulation, loose connections.

Fuel. Driver smoking, improper fueling, loose fuel connections.

Cargo. Flammable cargo, improperly sealed or loaded, poor ventilation.

· ***Fire Prevention***

Pay attention to the following:

Pretrip inspection. Make a complete inspection of the electrical, fuel, and exhaust systems, tires, and cargo.

Enroute inspection. Check the tires, wheels, and truck body for signs of heat whenever you stop during a trip.

Follow safe procedures. Follow correct safety procedures for fueling the vehicle, using brakes, handling flares, and other activities that can cause a fire.

Monitoring. Check the instruments and gauges often for signs of overheating, and use the mirrors to look for signs of smoke from tires, or the vehicle.

Caution. Use normal caution in handling anything flammable.

· ***Fire Fighting***

Knowing how to fight fires is important. Fires have been made worse by drivers who didn't know what to do. Here are some procedures to follow in case of fire:

Pull off the road. The first step is to get the vehicle off the road and stop. In doing so:

- Park in an open area, away from buildings, trees, brush, other vehicles or anything that might catch fire.
- Don't pull into a service station!
- Use your CB if you have one to notify the police of your problem and your location.

Keep the fire from spreading. Before trying to put out the fire, make sure that it doesn't spread any further.

- With an **engine** fire, turn off the engine as soon as you can. Don't open the hood if you can avoid it. Shoot extinguishers through louvers, radiator, or from the underside of the vehicle.
- For a **cargo** fire in a van or box trailer, keep the doors shut, especially if your cargo contains hazardous materials. Opening the van doors will supply the fire with oxygen and can cause it to burn very fast.

Use the right fire extinguisher.

- The B:C type fire extinguisher is designed to work on electrical fires and burning liquids. The A:B:C type is designed to work on burning wood, paper, and cloth as well.
- Water can be used on wood, paper or cloth, but don't use water on an electrical fire (you could get shocked) or a gasoline fire (it will just spread the flames).
- A burning tire must be cooled. Lots of water may be required.
- If you're not sure what to use, especially on a hazardous materials fire, wait for qualified fire fighters.

Extinguish the fire. Here are some rules to follow in putting out a fire:

- Know how the fire extinguisher works. Study the instructions printed on the extinguisher **before** you need it.
- When using the extinguisher, stay as far away from the fire as possible.
- *Aim at the source or base of the fire, not up in the flames.*
- Position yourself upwind. Let the wind carry the extinguisher to the fire rather than carrying the flames to you.
- Continue until whatever was burning has been cooled. Absence of smoke or flame does not mean the fire is completely out or cannot restart.
- Only try to extinguish a fire if you know what you are doing and it is safe to do so.

Test Your Knowledge
1. What are some things to do at an accident scene to prevent another accident?
2. Name two causes of tire fires.
3. What kinds of fires is a B:C extinguisher **not** good for?
4. When using your extinguisher, should you get as close as possible to the fire?
5. Name some causes of vehicle fires.
These questions may be on the test. If you can't answer all, reread Sections 2.15 and 2.16.

2.17 Staying Alert and Fit to Drive

- ***Be Ready To Drive***

Driving a vehicle for long hours is tiring. Even the best of drivers will become less alert. However, there are things that good drivers do to help stay alert and safe. Here are a few suggestions:

Get enough sleep. Leaving on a long trip when you're already tired is dangerous. If you have a long trip scheduled, make sure that you get a good sleep before you go. Most people require 7 - 8 hours of sleep every 24 hours.

Schedule trips safely. Your body gets used to sleeping during certain hours. If you are driving during those hours, you will be less alert. If possible, try to schedule trips for the hours you are normally awake. Many heavy motor vehicle accidents occur between midnight and 6 a.m. Tired drivers can easily fall asleep at these times, especially if they don't regularly drive at those hours. Trying to push on and finish a long trip at these times can be very dangerous.

Avoid medication. Many medicines can make you sleepy. Those that do have a label warning against operating vehicles or machinery. The most common medicine of this type is an ordinary cold pill. If you have to drive with a cold, you are better off suffering from the cold than from the effects of the medicine.

Keep cool. A hot, poorly ventilated cab can make you sleepy. Keep the window or vent cracked or use the air conditioner, if you have one.

Take breaks. Short breaks can keep you alert. But the time to take them is **before** you feel really drowsy or tired. Stop often. Walk around, and inspect your vehicle. It may help to do some physical exercises.

When You Do Become Sleepy

When you are sleepy, trying to "push on" is far more dangerous than most drivers think. It is a **major cause of fatal accidents**. Here are some important rules to follow:

Stop to sleep. When your body needs sleep, sleep is the only thing that will work. If you have to make a stop anyway, make it whenever you feel the first signs of sleepiness, even if it is earlier than you planned. By getting up a little earlier the next day, you can keep on schedule without the danger of driving while you are not alert.

Take a nap. If you can't stop for the night, at least pull off the road and take a nap. A nap as short as a half-hour will do more to overcome fatigue than a half-hour coffee stop.

Avoid drugs. There are no drugs that can overcome being tired. While they may keep you awake for a while, they won't make you alert. And eventually, you'll be even more tired than if you hadn't taken them at all. Sleep is the only thing that can overcome fatigue.

Alcohol and Driving

Drinking alcohol and then driving is a very serious problem. People who drink alcohol are involved in traffic accidents resulting in over 20,000 deaths every year. You should know:

- How alcohol works in the human body.
- How it affects driving.
- Laws regarding drinking and driving.
- Legal, financial, and safety risks of drinking and driving.

The Truth About Alcohol. There are many dangerous ideas about the use of alcohol. The driver who believes in these wrong ideas will be more likely to get into trouble. Here are some examples:

FALSE	THE TRUTH
Alcohol increases your ability to drive	Alcohol is a drug that will make you less alert and reduce your ability to drive safely
Some people can drink a lot and not be affected by it	Everyone who drinks is affected by alcohol
If you eat a lot first, you won't get drunk	Food will not keep you from getting drunk
Coffee and a little fresh air will help a drinker sober up	Only time will help a drinker sober up - other methods just don't work
Stick with beer - it's not as strong as wine or whiskey	A few beers are the same as a few shots of whiskey or a few glasses of wine

What is a Drink? It is the alcohol in drinks that affects human performance. It doesn't make any difference whether that alcohol comes from "a couple of beers" or from two glasses of wine or two shots of hard liquor.

All of the following drinks **contain the same amount of alcohol**:

- A 12 ounce glass of 5% beer
- A 5 ounce glass of 12% wine
- A 1 1/2 ounce shot of 80 proof liquor

How alcohol works. Alcohol goes directly from the stomach into the blood stream. A drinker can control the amount of alcohol which he or she takes in, by having fewer drinks or none. However, the drinker cannot control how fast the body gets rid of alcohol. If you have drinks faster than the body can get rid of them, you will have more alcohol in your body and your driving will be more affected. The amount of alcohol in your body is commonly measured by the Blood Alcohol Concentration (BAC).

What Determines Blood Alcohol Concentration. BAC is determined by the amount of alcohol you drink (more alcohol means higher BAC), how fast you drink (faster drinking means higher BAC), and your weight (a small person doesn't have to drink as much to reach the same BAC).

Alcohol and the Brain. Alcohol affects more and more of the brain as BAC builds up. The first part of the brain affected controls judgement and self control. One of the bad things about this is it can keep drinkers from knowing they are getting drunk. And of course, good judgement and self control are absolutely necessary for safe driving.

As blood alcohol concentration continues to build up, muscle control, vision, and coordination are affected more and more. Eventually, a person will pass out.

How Alcohol Affects Driving. All drivers are affected by drinking alcohol. Alcohol affects judgement, vision, coordination, and reaction time. It causes serious driving errors, such as:

- Increased reaction time to hazards
- Driving too fast or too slow.
- Driving in the wrong lane.
- Running over the curb.
- Weaving.
- Straddling lanes.
- Quick, jerky starts.
- Not signaling, failure to use lights.
- Running stop signs and red lights.
- Improper passing.

These effects mean increased chances of a crash and chances of losing your driver's license. Accident statistics show that the chance of a crash is much greater for drivers who have been drinking than for drivers who were not.

- ***Other Drugs***

Besides alcohol, other legal and illegal drugs are being used more often. Laws prohibit possession or use of many drugs while on duty They prohibit being under the influence of any "controlled substance"; an amphetamine (including "pep pills" and "bennies") narcotics or any other substance which can make the driver unsafe This could include a variety of prescription and over-the-counter drugs (cold medicines) which may make the driver drowsy or otherwise affect safe driving ability. However, possession and use of a drug given to a driver by a doctor is permitted if the doctor informs the driver that it will not affect safe driving ability.

Pay attention to warning labels of legitimate drugs and medicines and to doctor's orders regarding possible effects. Stay away from illegal drugs. Don't use any drug that hides fatigue - the only cure for fatigue is rest. Alcohol can make the effects of other drugs much worse. The safest rule is don't mix drugs with driving at all.

Use of drugs can lead to traffic accidents resulting in death, injury and property damage. Furthermore, it can lead to arrest, fines, and jail sentences. It can also mean the end of a person's driving career

- ***Illness***

Once in a while, you may become so ill that you cannot operate a motor vehicle safely. If this happens to you, you must not drive However, in case of an emergency you may drive to the nearest place where you can safely stop.

2.18 Hazardous Materials Rules For All Commercial Drivers

All drivers should know something about hazardous materials. You must be able to recognize hazardous cargo, and you must know whether or not you can haul it without having a Hazardous Material endorsement to your CDL license.

- ***What Are Hazardous Materials***

The Federal Hazardous Materials Table names materials that are hazardous. They pose a risk to health, safety, and property during transportation. You must follow the many rules about transporting them. The intent of the rules is to

- contain the product,
- communicate the risk,
- ensure safe drivers and equipment.

- ***Why Are There Rules?***

To contain the product: Many hazardous products can injure or kill on contact. To protect drivers and others from contact, the rules tell shippers how to package safely. Similar rules tell drivers how to load, transport, and unload bulk tanks. These are containment rules.

To communicate the risk: The shipper uses a shipping paper and package labels to warn dockworkers and drivers of the risk. Shipping orders, bills of lading, and manifests are all examples of shipping papers.

There are 22 different hazard classes. A material's hazard class reflects the risks associated with it. Here are the 22 hazard classes.

Blasting Agent	Nonflammable Gas
Combustible Liquid	Organic Peroxide
Corrosive	ORM-A
Etiologic Agents	ORM-B
Explosive A	ORM-C
Explosive B	ORM-D
Explosive C	ORM-E
Flammable Gas	Oxidizer
Flammable Liquid	Poison A
Flammable Solid	Poison B
Irritating Material	Radioactive Material

Shippers write the name of the hazard class of hazardous products in the item description on the shipping paper. Similar words should show on four inch diamond shaped labels on the containers of hazardous materials. If the diamond label won't fit on the container, shippers put the label on a tag. For example, compressed gas cylinders that will not hold a label will have tags or decals. Labels look like the examples shown in Figure 2-15.

After an accident or hazardous material leak, the driver may be unable to speak when help arrives. Fire fighters and police must know the hazards involved in order to prevent more damage or injury. The driver's life, and the lives of others, may depend on quickly finding the shipping papers for hazardous cargo. For that reason,

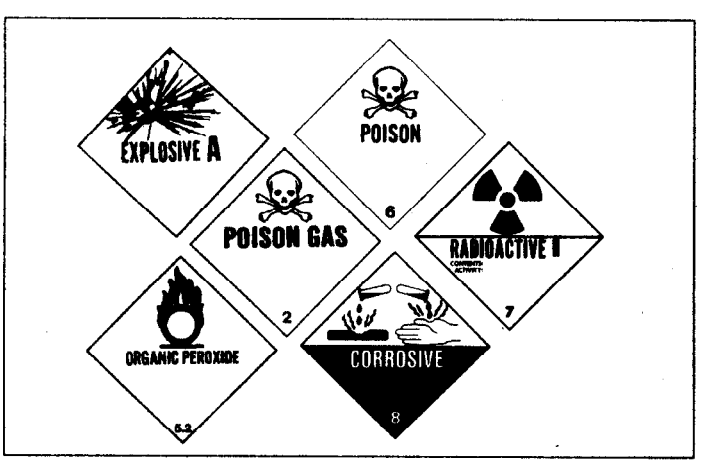

Figure 2-15
Examples of Labels

you must tab shipping papers related to hazardous materials, or keep them on top of other shipping papers. You must also keep shipping papers

- in a pouch on the driver's door, or
- in clear view within reach, or
- on the driver's seat.

Drivers must use placards to warn others of their hazardous cargo. Placards are signs placed on the outside of a vehicle to show the hazard class(es) of products on board. There are 19 different DOT placards. A chart showing example placards appears at the end of Section 7. Each is turned upright on a point, like a diamond shape. The person who does the loading must place the placards on the front, rear, and both sides of the vehicle.

Not all vehicles carrying hazardous materials need to have placards. The rules about placards are given in Section 7 of this driver's manual. You can drive a vehicle that carries hazardous materials if it does not require placards. If it requires placards, you must not drive it unless your driver's license has the hazardous materials endorsement.

To ensure safe drivers and equipment: The rules require all drivers of placarded vehicles to learn how to safely load and transport hazardous products. They must have a commercial driver's license with the hazardous materials endorsement.

To get the required endorsement you must pass a written test on material found in Section 7 of this manual. You also will need a tank endorsement if you transport hazardous products in a cargo tank on a truck larger than 26,000 pounds, gross vehicle weight rating.

Drivers who need the hazardous materials endorsement must learn the placard rules. If you do not know if your vehicle needs placards, ask your employer. **Never drive a vehicle needing placards unless you have the hazardous materials endorsement**. To do so is a crime. When stopped, you will be cited and you will not be allowed to drive your truck further. It will cost you time and money. A failure to placard when needed will risk your life and others if you have an accident. Emergency help will not know of your hazardous cargo.

Hazardous materials drivers must also know which products they can load together, and which they can not. These rules are also in Section 7. Before loading a truck with more than one type of product, you must know if it is safe to load them together. If you do not know, ask your employer.

Test Your Knowledge
1. Common medicines for colds can make you sleepy. True or false?
2. What should you do if you do become sleepy while driving?
3. Coffee and a little fresh air will help a drinker sober up. True or false?
4. What is a hazardous materials placard?
5. Why are placards used?
These questions may be on the test. If you can't answer all, reread Sections 2.17 and 2.18.

Section 3: Transporting Cargo Safely

This section tells you about cargo safety. All drivers must understand some basic cargo safety rules to get a commercial driver's license, because the CDL license allows the driver to transport cargo in a truck.

If you load cargo wrong it can be a danger to others and to yourself. Other highway users can hit or be hit by loose cargo. Your vehicle can be damaged by overload. Steering can be affected badly if you don't load cargo right. Loose cargo can hurt you during a quick stop or crash.

Whether or not you load and secure the cargo yourself, you are responsible for:

- Inspecting your cargo.
- Recognizing overloads and poorly balanced weight.
- Knowing your cargo is securely tied down or covered.

These are discussed below.

If you intend to carry hazardous material that requires placards on your vehicle, you will also have to have a hazardous materials endorsement. Section 7 of this manual has the information you need to pass the hazardous materials test.

This Section Covers

- ***Inspecting Cargo***
- ***Cargo Weight & Balance***
- ***Securing Cargo***
- ***Liquids in Bulk***
- ***Other Cargo Needing Care***

3.1 Inspecting Cargo

- ***Before Starting***
- ***Every 3 hrs / 150 Miles***
- ***After Every Break***

As part of your pre-trip inspection, check for overloads, poorly balanced weight, and cargo that is not secured right.

Inspect the cargo and its securing devices again within 25 miles after beginning a trip. Make any adjustments needed. Check the cargo and securing devices as often as necessary during a trip to keep the load secure. Inspect again:

- After you have driven for 3 hours or 150 miles.
- After every break you take during driving.

Federal, state and local regulations of weight, securement, cover, and truck routes vary greatly from place to place. Know the regulations where you will be driving.

3.2 Weight & Balance

- ***Definitions You Should Know***

You are responsible for not being overloaded. Here are some definitions of weight you should know:

Gross vehicle weight (GVW). The total weight of a single vehicle plus its load.

Gross combination weight (GCW). The total weight of a powered unit plus trailer(s) plus the cargo.

Gross Vehicle Weight Rating (GVWR). The maximum GVW specified by the manufacturer for a single vehicle plus its load.

Gross Combination Weight Rating (GCWR). The maximum GCW specified by the manufacturer for a specific combination of vehicles plus its load.

Axle Weight. The weight transmitted to the ground by one axle or one set of axles.

Tire load. The maximum safe weight a tire can carry at a specified pressure. This rating is stated on the side of each tire.

Suspension systems. Suspension systems have a manufacturer's weight capacity rating.

Coupling device capacity. Coupling devices are rated for the maximum weight they can pull and/or carry.

· ***Legal Weight Limits***

You must keep weights within legal limits. States have maximums for GVWs, GCWs and axle weights. Often, maximum axle weights are set by a bridge formula. A bridge formula permits less maximum axle weight for axles that are closer together. This is to prevent overloading bridges and roadways.

Overloading can have bad effects on steering, braking, and speed control. Overloaded trucks have to go very slow on upgrades. Worse, they may gain too much speed on downgrades. Stopping distance increases. Brakes can fail when forced to work too hard.

During bad weather or in mountains, it may not be safe to operate at legal maximum weights. Take this into account before driving.

· ***Don't Be Top-Heavy***

The height of the vehicle's center of gravity is very important for safe handling. A high center of gravity (cargo piled up high, or heavy cargo on top) means you are more likely to tip over. It is most dangerous in curves or if you have to swerve to avoid a hazard. It is very important to distribute the cargo so it is as low as possible. Put the heaviest parts of the cargo under the lightest parts.

· ***Balance the Weight***

Poor weight balance can make vehicle handling unsafe. Too much weight on the steering axle can cause hard steering. It can damage the steering axle and tires. Underloaded front axles (caused by shifting weight too far to the rear) can make the steering axle weight too light to steer safely. Too little weight on the driving axles can cause poor traction. The drive wheels may spin easily. During bad weather, the truck may not be able to keep going. Weight that is loaded so there is a high center of gravity causes greater chance of rollover. On flat bed vehicles, there is also a greater chance that the load will shift to the side or fall off. Figure 3-1 shows examples of the right and wrong way to balance cargo weight.

Test Your Knowledge

1. For what three things related to cargo are drivers responsible?
2. How often must you stop while on the road to check your cargo?
3. How is **Gross Combination Weight Rating** different from **Gross Combination Weight?**
4. Name two situations where legal maximum weights may not be safe.
5. What can happen if you don't have enough weight on the front axle?

These questions may be on your test. If you can't answer all, reread Sections 3.1 & 3.2.

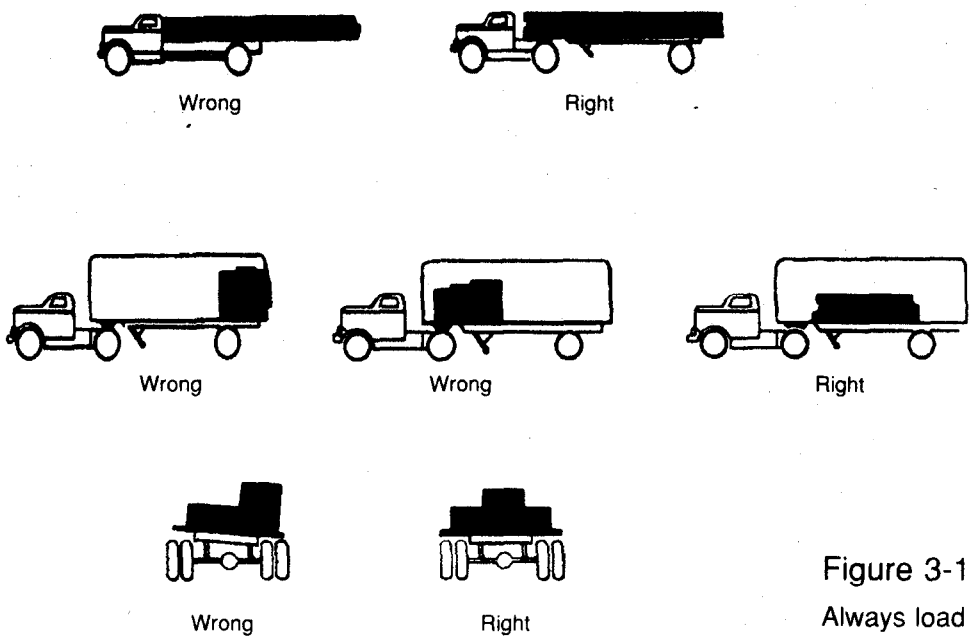

Figure 3-1

Always load cargo the right way!

3.3 Securing Cargo

· ***Blocking and Bracing***

Blocking is used in the front, back, and/or sides of a piece of cargo to keep it from sliding. Blocking is shaped to fit snugly against cargo. It is secured to the cargo deck to prevent cargo movement. **Bracing** is also used to prevent movement of cargo. Bracing goes from the upper part of the cargo to the floor and/or walls of the cargo compartment.

· ***Cargo Tiedown***

On flatbed trailers or trailers without sides, cargo must be secured to keep it from shifting and falling off. In closed vans, tiedowns can also be important to prevent cargo shifting that may affect the handling of the vehicle. Tiedowns must be of the proper type and proper strength. The combined strength of all cargo tiedowns must be strong enough to lift one and one half times the weight of the piece of cargo tied down. Proper tiedown equipment must be used, including ropes, straps, chains, and tensioning devices (winches, ratchets, clinching components). Tiedowns must be attached to the vehicle correctly (hook, bolt, rails, rings).

Cargo should have at least one tiedown for each 10 feet of cargo. Make sure you have enough tiedowns to meet this need. No matter how small the cargo is, it should have at least two tiedowns holding it.

There are special requirements for securing various heavy pieces of metal. Find out what they are if you are to carry such loads.

· ***Header Boards***

Front end header boards ("headache racks") protect you from your cargo in case of a collision. Make sure the front end structure is in good condition. The front end structure should block the forward movement of any cargo you carry.

Covering Cargo

There are two basic reasons for covering cargo, (1) to protect people from spilled cargo, and (2) to protect the cargo from weather. Spill protection is a safety requirement in many states. Be familiar with the laws in the states you drive in.

You should look at your cargo covers in the mirrors from time to time while driving. A flapping cover can tear loose, uncovering the cargo, and possibly blocking your view or someone else's.

You cannot inspect sealed loads, but you should check that you don't exceed gross weight and axle weight limits.

Sealed & Containerized Loads

Containerized loads generally are used when freight is carried part way by rail or ship. Delivery by truck occurs at the beginning and/or end of the journey. Some containers have their own tiedown devices or locks that attach directly to a special frame. Others have to be loaded onto flat bed trailers. They are secured with tiedowns just like any other large cargo.

3.4 Tank Vehicles

A "tank vehicle" is a vehicle used to transport any liquid or liquified gaseous material in a permanently attached tank, or a portable tank having a capacity of 1000 gallons or more. Hauling liquids in tanks requires special skills because of high center of gravity and liquid movement.

High Center of Gravity

High center of gravity means that much of the load's weight is carried high up off the road. This makes the vehicle top-heavy and easy to roll over. Liquid tankers are especially easy to roll over. Tests have shown that **tankers can turn over at the speed limits posted for curves. Take highway curves or on ramp/off ramp curves well below the posted speeds.**

Danger of Surge

Liquid surge results from movement of the liquid in partially filled tanks. This movement can have bad effects on handling. For example, when coming to a stop, the liquid will surge back and forth. When the wave hits the end of the tank, it tends to push the truck in the direction the wave is moving. If the truck is on a slippery surface such as ice, the wave can shove a stopped truck out into an intersection. The driver of a liquid tanker must be very familiar with the handling of the vehicle.

Bulkheads

Some liquid tanks are divided into several smaller tanks by bulkheads. When loading and unloading the smaller tanks, the driver must pay attention to weight distribution. Don't put too much weight on the front or rear of the vehicle.

Baffles

Baffled liquid tanks have bulkheads in them with holes that let the

Test Your Knowledge
1. What is the minimum number of tiedowns for any flat bed load? 2. What is the minimum number of tiedowns for a 20 ft. load? 3. Name the two basic reasons for covering cargo on an open bed. 4. What must you check before transporting a sealed load?
These questions may be on your test. If you can't answer all, reread Section 3.3.

liquid flow through. The baffles help to control the forward and backward liquid surge. However, side to side surge can still occur which can cause a roll over. Be extremely cautious (slow and careful) in taking curves or making sharp turns with a partially or fully loaded liquid tanker.

· ***Smooth Bore Tanks***

Unbaffled liquid tankers (sometimes called "smooth bore" tanks) have nothing inside to slow down the flow of the liquid. Therefore, forward-and-back surge is very strong. Unbaffled tanks are usually those that transport food products (milk, for example). (Sanitation regulations forbid the use of baffles because of the difficulty in cleaning the inside of the tank.) Be extremely cautious (slow and careful) in driving smooth bore tanks, especially when starting and stopping.

· ***Outage***

Outage. Never load a cargo tank totally full. Liquids expand as they warm and you must leave room for the expanding liquid. This is called outage. Since different liquids expand by different amounts, they require different amounts of outage. You must know the outage requirement when hauling liquids in bulk.

· ***Dense Liquids***

A full tank of dense liquid (such as some acids) may exceed legal weight limits. For that reason you may often only partially fill tanks with heavy liquids. The amount of liquid to load into a tank depends on:

- the amount the liquid will expand in transit, and
- the weight of the liquid, and
- legal weight limits.

3.5 Other Cargo Needing Special Attention

· ***Dry Bulk***

Dry bulk tanks require special care because they often have a high center of gravity, and the load can shift. Be extremely cautious (slow and careful) going around curves and making sharp turns.

· ***Hanging Meat***

Hanging meat (suspended beef, pork, lamb) in a refrigerated truck can be a very unstable load with a high center of gravity. Particular caution is needed on sharp curves such as off ramps and on ramps. Go slow.

· ***Livestock***

Livestock can move around in a trailer, causing unsafe handling. With less than a full load, use false bulkheads to keep livestock bunched together. Even when bunched, special care is necessary because livestock can lean on curves. This shifts the center of gravity and makes rollover more likely.

· ***Oversized Loads***

Over length, over width, and/or over weight loads require special transit permits. Driving is usually limited to certain times. Special equipment may be necessary such as "wide load" signs, flashing lights, flags, etc. Such loads may require a police escort or pilot vehicles bearing warning signs and/or flashing lights. These special loads require special driving care.

1. How is a **bulkhead** different from a **baffle**?
2. Should a tanker with liquid take freeway onramps / offramps at the posted speed limit?
3. Are smooth bore tankers different to drive than those with baffles?
4. What three things determine how much liquid you can load?

These questions may be on your test. If you can't answer all, reread Sections 3.4 & 3.5.

Section 4: Transporting Passengers

Bus drivers must have a commercial driver's license if they drive a vehicle designed to seat more than 15 persons, including the driver. However, you are not considered a bus driver if you only carry family members for personal reasons.

Bus drivers must have a passenger endorsement on their commercial driver's license. To get the endorsement you must pass a written test on Sections 2, 3, and 4 of this manual. (If your bus has air brakes, you must also pass a written test on Section 5.) You must also pass the performance tests required for the class of vehicle you drive. This section has information you must know to drive a bus safely.

This Section Covers

- ***Definition of a Bus***
- ***Pretrip Inspection***
- ***Loading***
- ***Safe Driving with Buses***

4.1 Pretrip Inspection

Before driving your bus, make sure it is safe. During the pretrip inspection check defects reported by previous drivers. Only if defects reported earlier have been fixed, should you sign the previous driver's report. This is your certification that the defects reported earlier have been fixed.

Vehicle Systems

Make sure these things are in good working order before driving

- Service brakes, including air hose couplings (if your bus has a trailer or semi-trailer)
- Parking brake
- Steering mechanism
- Lights and reflectors
- Tires (front wheels must not have recapped or regrooved tires)
- Horn
- Windshield wiper or wipers
- Rear-vision mirror or mirrors
- Coupling devices
- Wheels and rims

Access Doors & Panels

As you check the outside of the bus, close any open emergency exits. Also close any open access panels (for baggage, restroom service, engine, etc) before driving.

Bus Interior

People sometimes damage unattended buses. Always check the interior of the bus before driving to ensure rider safety. Aisles and stairwells must always be clear. The following parts of your bus must be in safe working condition.

- each handhold and railing
- floor covering
- signaling devices, including the restroom emergency buzzer, if the bus has a restroom
- emergency exit handles

The seats must be safe for riders. All seats must be securely fastened to the bus. There is one exception to this rule. A charter bus carrying agricultural workers may have up to 8 temporary folding seats in the aisle.

Never drive with an open emergency exit door or window. The "Emergency Exit" sign on an emergency door must be clearly visible. If there is a red emergency door light, it must work. Turn it on at night or any other time you use your outside lights.

· ***Roof Hatches***

You may lock some emergency roof hatches in a partly open position for fresh air. Do not leave them open as a regular practice. Keep in mind the bus's higher clearance while driving with them open.

Make sure your bus has the fire extinguisher and emergency reflectors required by law. The bus must also have spare electrical fuses unless equipped with circuit breakers.

· ***Use Your Seatbelt!***

The driver's seat should have a seat belt. Always use it for safety.

4.2 Loading and Trip Start

Do not allow riders to leave carry-on baggage in a doorway or aisle. *There should be nothing in the aisle that might trip other riders.* Secure baggage and freight in ways that avoid damage and

- allow the driver to move freely and easily
- allow riders to exit by any window or door in an emergency
- protect riders from injury if carry-ons fall or shift

· ***Hazardous Materials***

Watch for cargo or baggage containing hazardous materials. Most hazardous materials cannot be carried on a bus.

The Federal Hazardous Materials Table shows which materials are hazardous. They pose a risk to health, safety, and property during transportation. The rules require shippers to mark containers of *hazardous material with the material's name, ID number, and hazard* label. There are 22 different 4 inch diamond shaped hazard labels like the examples shown in Figure 4-1. A chart showing all the labels is at the back of this manual. Watch for the diamond shaped labels. Do not transport any hazardous material unless you are sure the rules allow it.

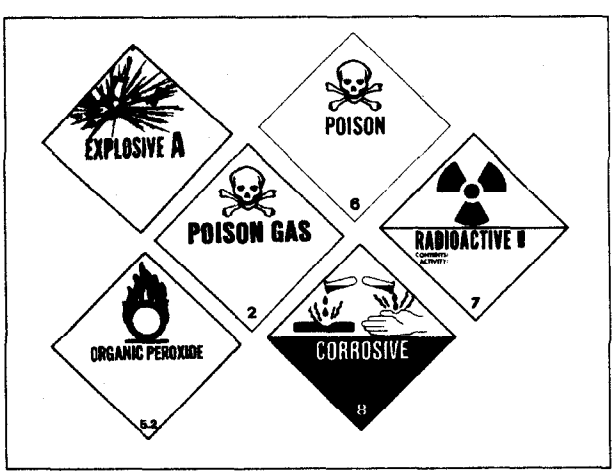

Figure 4-1
Examples of Labels.

Buses may carry small-arms ammunition labeled ORM-D, emergency hospital supplies and drugs. You can carry small amounts of some other hazardous materials if the shipper cannot send them any other way. Buses must **never** carry

- Class A poison, **liquid** Class B poison, tear gas, irritating material
- more than 100 pounds of **solid** Class B poisons
- explosives in the space occupied by people, except small arms ammunition
- labeled radioactive materials in the space occupied by people
- more than 500 pounds total of allowed hazardous materials, and no more than 100 pounds of any one class

· ***Forbidden Hazardous Materials***

Riders sometimes board a bus with an unlabeled hazardous material. They may not know it is unsafe. Do not allow riders to carry on common hazards such as car batteries or gasoline.

No rider may stand forward of the rear of the driver's seat. Buses designed to allow standing must have a 2 inch line on the floor or some other means of showing riders where they can not stand. This is called the standee line. All standing riders must stay behind it.

· ***Standee Line***

When arriving at the destination or intermediate stops announce

- the location,
- reason for stopping,
- next departure time, and
- bus number

· ***At Your Destination***

Remind riders to take carry-ons with them if they get off the bus. If the aisle is on a lower level than the seats, remind riders of the step-down. It is best to tell them before coming to a complete stop.

Charter bus drivers should not allow riders on the bus until departure time. This will help prevent theft or vandalism of the bus.

4.3 On The Road

· ***Passenger Supervision***

Passenger supervision while driving. Many charter and intercity carriers have passenger comfort and safety rules. Mention rules about smoking, drinking, or use of radio & tape players at the start of the trip. Explaining the rules at the start will help to avoid trouble later on.

While driving, scan the interior of your bus as well as the road ahead, to the sides, and to the rear. You may have to remind riders about rules, or to keep arms and heads inside the bus.

Test Your Knowledge
1. Name some things to check in the interior of a bus during pre-trip inspection. 2. What are some hazardous materials you **can** transport by bus? 3. What are some hazardous materials you **can't** transport by bus? 4. What is a standee line?
These questions may be on your test. If you can't answer all, reread Sections 4.1 and 4.2.

· ***At Stops***

Riders can stumble when getting on or off and when the bus starts or stops. Caution riders to watch their step when leaving the bus. Wait for them to sit down or brace themselves before starting. Starting and stopping should be as smooth as possible to avoid rider injury.

Occasionally, you may have a drunk or disruptive rider. You must ensure this rider's safety as well as that of others. Don't discharge such riders where it would be unsafe for them. It may be safer at the next scheduled stop, or a well lighted area where there are other people. Many carriers have guidelines for handling disruptive riders.

· ***Common Accidents***

The most common bus crashes. Bus crashes often happen at intersections. Use caution, even if a signal or stop sign controls other traffic. School and mass transit buses sometimes scrape off mirrors or hit passing vehicles when pulling out from a bus stop. Remember the clearance your bus needs, and watch for poles and tree limbs at stops. Know the size of the gap your bus needs to accelerate and merge with traffic. Wait for the gap to open before leaving the stop. Never assume other drivers will brake to give you room when you signal or start to pull out.

· ***Speed on Curves***

Crashes on curves kill people and destroy buses. They result from excessive speed, often when rain or snow has made the road slippery. Every banked curve has a safe "design speed." In good weather, the posted speed is safe for cars, but it may be too high for many buses. With good traction, the bus may roll over; with poor traction it might slide off the curve. **Reduce speed for curves!** If your bus leans toward the outside on a banked curve, you are driving too fast.

· ***Railroad Crossings***

Stop at RR crossings. Stop your bus between 15 and 50 feet before railroad crossings. Listen and look in both directions for trains. You should open your forward door if it improves your ability to see or hear an approaching train. Before crossing after a train has passed, make sure there isn't another train coming in the other direction on other tracks. If your bus has a manual transmission, don't change gears while crossing the tracks.

You do not have to stop, but must slow down and carefully check for other vehicles

- at street car crossings,
- at railroad tracks used only for industrial switching within a business district,
- where a policeman or flagman is directing traffic,
- if a traffic signal shows green, and
- at crossings marked "exempt crossing"

Stop at drawbridges. Stop at drawbridges that do not have a signal light or traffic control attendant. Stop at least 50 feet before the draw of the bridge. Look to make sure the draw is completely closed before crossing. You do not need to stop, but must slow down and make sure it's safe, when

- there is a traffic light showing green
- the bridge has an attendant or traffic officer that controls traffic whenever the bridge opens

· ***Drawbridges***

4.4 After-Trip Vehicle Inspection

Inspect your bus at the end of each shift. If you work for an interstate carrier, you must complete a written inspection report for each bus driven. The report must specify each bus and list any defect that would affect safety or result in a breakdown. If there are no defects, the report should say so.

Riders sometimes damage safety related parts such as hand-holds, seats, emergency exits, and windows. If you report this damage at the end of a shift, mechanics can make repairs before the bus goes out again. Mass transit drivers should also make sure passenger signaling devices and brake-door interlocks work properly.

4.5 Prohibited Practices

Avoid fueling your bus with riders on board unless absolutely necessary. Never refuel in a closed building with riders on board.

Don't talk with riders, or engage in any other distracting activity, while driving.

Do not tow or push a disabled bus with riders aboard either vehicle, unless getting off would be unsafe. Only tow or push the bus to the nearest safe spot to discharge passengers. Follow your employer's guidelines on towing or pushing disabled buses.

4.6 Use of Brake-Door Interlocks

Urban mass transit coaches may have a brake and accelerator interlock system. The interlock applies the brakes and holds the throttle in idle position when the rear door is open. The interlock releases when you close the rear door. Do not use this safety feature in place of the parking brake.

Test Your Knowledge
1. Does it matter where you make a disruptive passenger get off the bus? 2. How far from a railroad crossing should you stop? 3. When must you stop before crossing a drawbridge? 4. Describe from memory the "prohibited practices" listed above. 5. The rear door of a transit bus has to be open to put on the parking brake. True or false?
These questions may be on your test. If you can't answer all, reread Section 4.3.

Section 5: Air Brakes

This section tells you about air brakes. You need this information for safe operation of air brakes used on trucks and buses. If you want to pull a trailer with air brakes, you also need to read Section 6: Combination Vehicles.

Air brakes use **compressed air** to make the brakes work. You can apply all the braking force you need to each of the wheels of a heavy vehicle, even units pulling 2 or 3 trailers. Air brakes are a safe way of stopping large vehicles if the brakes are well maintained and used right. However, you must know more about air brakes than you need to know with the simpler brake systems used on light vehicles. Therefore, it is important for you to study this section.

Air brake systems are three braking systems combined: the service brake system, the parking brake system, and the emergency brake system.

- The **service brake** system applies and releases the brakes when you use the brake pedal during normal driving.
- The **parking brake** system applies and releases the parking brakes when you use the parking brake control.
- The **emergency brake** system uses parts of the service and parking brake systems to stop the vehicle in the event of a brake system failure.

The parts of these systems are discussed in greater detail below.

This Section Covers

- ***Air Brake System Parts***
- ***Dual Air Brake Systems***
- ***Inspecting Air Brakes***
- ***Using Air Brakes***

5.1 The Parts of an Air Brake System

There are many parts to an air brake system. You should know about the parts discussed here.

- ***Air Compressor***

The air compressor pumps air into the air storage tanks (reservoirs). The air compressor is connected to the engine through gears or a V-belt. The compressor may be air cooled or may be cooled by the engine cooling system. It may have its own oil supply, or be lubricated by engine oil. If the compressor has its own oil supply, check the oil level before driving.

- ***Air Compressor Governor***

The governor controls when the air compressor will pump air into the air storage tanks. When air tank pressure rises to the "cut-out" level (around 125 pounds per square inch, or "psi"), the governor stops the compressor from pumping air. When the tank pressure falls to the "cut-in" pressure (around 100 psi) the governor allows the compressor to start pumping again.

- ***Air Storage Tanks***

Air storage tanks are used to hold compressed air. The number and size of air tanks varies among vehicles. The tanks will hold enough air to allow the brakes to be used several times even if the compressor stops working.

· ***Air Tank Drains***

Compressed air usually has some water and some compressor oil in it which is bad for the air brake system. For example, the water can freeze in cold weather and cause brake failure. The water and oil tend to collect in the bottom of the air tank. Therefore each air tank is equipped with a drain valve in the bottom. There are two types:

- manually operated by turning a quarter turn, shown in Figure 5-1, or by pulling a cable. You must drain the tanks yourself at the end of each day of driving;
- automatic - the water and oil is automatically expelled. They may be equipped for manual draining as well.

The automatic types are available with electric heating devices. These help prevent freeze up of the automatic drain in cold weather.

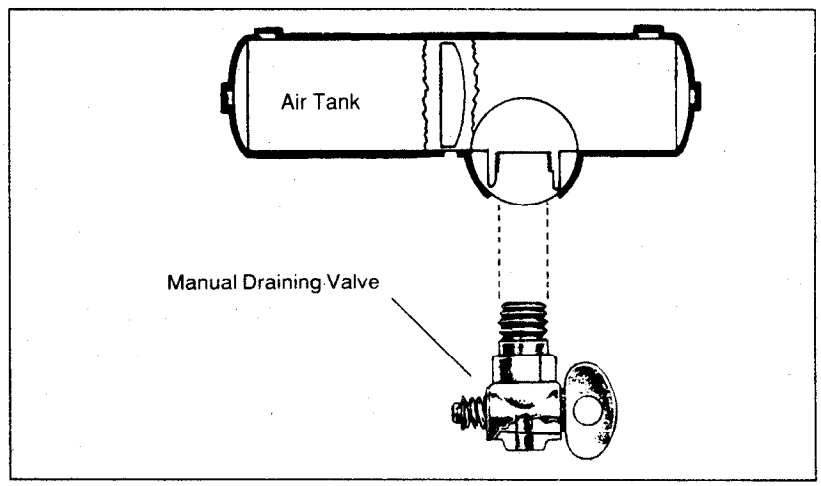

Figure 5-1
Manual Drain Valve

· ***Alcohol Evaporator***

Some air brake systems have an alcohol evaporator to put alcohol into the air system. This helps to reduce the risk of ice in air brake valves and other parts during cold weather. Ice inside the system can make the brakes stop working.

Check the alcohol container and fill up as necessary every day during cold weather. **Daily air tank drainage is still needed to get rid of water and oil.** (Unless the system has automatic drain valves.)

· ***Safety Valve***

A safety relief valve is installed in the first tank the air compressor pumps air to. The safety valve protects the tank and the rest of the system from too much pressure. The valve is usually set to open at 150 psi. If the safety valve releases air, something is wrong. Have the fault fixed by a mechanic.

· ***The Brake Pedal***

You put on the brakes by pushing down the brake pedal. (It is also called the foot valve, or treadle valve.) Pushing the pedal down harder applies more air pressure. Letting up on the brake pedal reduces the air pressure and releases the brakes. Releasing the brakes lets some compressed air go out of the system, so the air pressure in the tanks is reduced. It must be made up by the air compressor. Pressing and releasing the pedal unnecessarily can let air out faster than the compressor can replace it. If the pressure gets too low the brakes won't work.

When you push the brake pedal down, two forces push back against your foot. One force comes from a spring. The second force comes from the air pressure going to the brakes. This lets you feel how much air pressure is being applied to the brakes.

Foundation brakes are used at each wheel. The most common type is the S-cam drum brake, shown in Figure 5-2. The parts of the brake are discussed below.

Brake drums, shoes and linings. Brake drums are located on each end of the vehicle's axles. The wheels are bolted to the drums. The braking mechanism is inside the drum. To stop, the brake shoes and linings are pushed against the inside of the drum. This causes friction which slows the vehicle (and creates heat). The heat a drum can take without damage depends on how hard and how long the brakes are used. Too much heat can make the brakes stop working.

S-Cam Brakes. When you push the brake pedal, air is let into each brake chamber (see Figure 5-2). Air pressure pushes the rod out, moving the slack adjuster, thus twisting the brake cam shaft. This turns the S-cam (so called because it is shaped like the letter "S"). The S-cam forces the brake shoes away from one another and presses them against the inside of the brake drum. When you release the brake pedal, the S-cam rotates back and a spring pulls the brake shoes away from the drum, letting the wheels roll freely again.

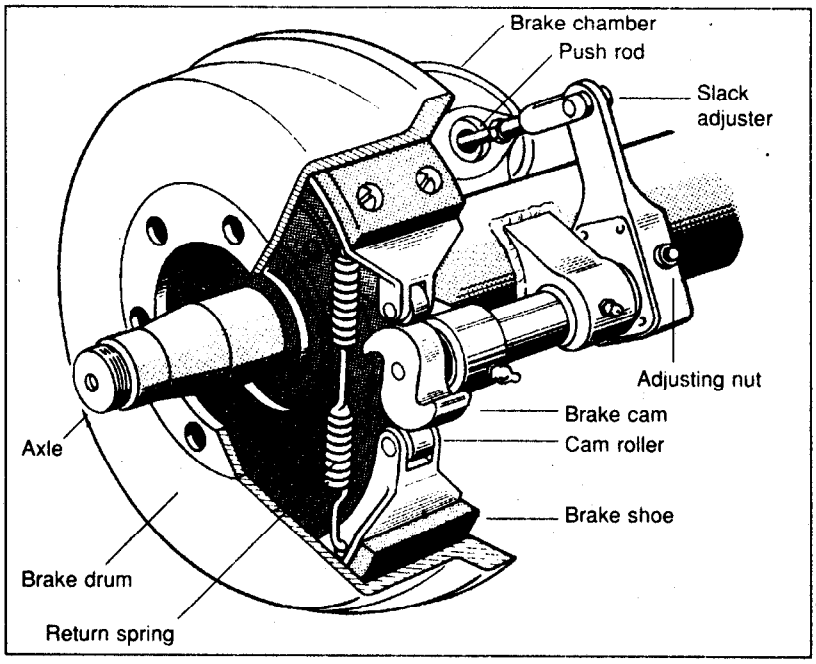

Figure 5-2
S-cam Air Brake

Wedge brakes. In this type brake, the brake chamber push rod pushes a wedge directly between the ends of two brake shoes. This shoves them apart and against the inside of the brake drum. Wedge brakes may have a single brake chamber, or two brake chambers, pushing wedges in at both ends of the brake shoes. Wedge type brakes may be self-adjusting or may require manual adjustment.

Disc brakes. In air-operated disc brakes, air pressure acts on a brake chamber and slack adjuster, like S-cam brakes. But instead of the S-cam, a "power screw" is used. The pressure of the brake chamber on the slack adjuster turns the power screw. The power screw clamps the disc or rotor between the brake lining pads of a caliper, similar to a large C-clamp.

Wedge brakes and disc brakes are less common than S-cam brakes.

Supply Pressure Gauges

All air-braked vehicles have a pressure gauge connected to the air tank. If the vehicle has a dual air brake system, there will be a gauge for each half of the system. (Or a single gauge with two needles). Dual systems will be discussed later. These gauges tell you how much pressure is in the air tanks.

Application Pressure Gauge

This gauge shows how much air pressure you are applying to the brakes. (This gauge is not on all vehicles.) When going down steep grades, increasing application pressure to hold the same speed means the brakes are fading. You should slow down and use a lower gear. The need for increased pressure can also be caused by brakes out of adjustment, air leaks, or mechanical problems.

Low Air Pressure Warning

A low air pressure warning signal is required on vehicles with air brakes. A warning signal you can see must come on before the air pressure in the tanks falls below 60 psi. (Or one half the compressor governor cutout pressure on older vehicles). The warning is usually a red light. A buzzer may also come on.

Another type of warning is the "wig wag." This device drops a mechanical arm into your view when the pressure in the system drops below 60 psi. An automatic wig wag will rise out of your view when the pressure in the system goes above 60 psi. The manual reset type must be placed in the "out of view" position manually. It will not stay in place until the pressure in the system is above 60 psi.

On large buses it is common for the low pressure warning devices to signal at 80-85 psi.

Stop Light Switch

Drivers behind you must be warned when you put your brakes on. The air brake system does this with an electric switch that works by air pressure. The switch turns on the brake lights when you put on the air brakes.

Front Brake Limiting Valve

Some older vehicles (made before 1975) have a front brake limiting valve and a control in the cab. The control is usually marked "normal" and "slippery." When you put the control in the "slippery" position, the limiting valve cuts the "normal" air pressure to the front brakes by half. Limiting valves were used to reduce the chance of the front wheels skidding on slippery surfaces. However, they actually reduce the stopping power of the vehicle. Front wheel braking is good under all conditions. Tests have shown front wheel skids from braking are not likely even on ice. **Make sure the control is in the "normal" position to have normal stopping power.**

Many vehicles have automatic front wheel limiting valves. They reduce the air to the front brakes except when the brakes are put on very hard (60 psi or more application pressure). These valves cannot be controlled by the driver.

Spring Brakes

All trucks, truck tractors, and buses must be equipped with emergency brakes and parking brakes. They must be held on by mechanical force (because air pressure can eventually leak away). Spring brakes are usually used to meet these needs. When driving, powerful springs are held back by air pressure. If the air pressure is removed, the springs put on the brakes. A parking brake control in the cab allows the driver to let the air out of the spring brakes. This

lets the springs put the brakes on. A leak in the air brake system which causes all the air to be lost will also cause the springs to put on the brakes.

Tractor and straight truck spring brakes will come fully on when air pressure drops to a range of 20 to 45 psi (typically 20 to 30 psi). Do not wait for the brakes to come on automatically. When the low air pressure warning light and buzzer first come on, bring the vehicle to a safe stop right away, while you can still control the brakes.

The braking power of spring brakes depends on the brakes being in adjustment. If the brakes are not adjusted right, neither the regular brakes nor the emergency/parking brakes will work right.

Parking Brake Controls

In newer vehicles with air brakes, you put on the parking brakes using a **diamond shaped, yellow, push-pull control knob**. You pull the knob out to put the parking brakes (spring brakes) on, and push it in to release them. On older vehicles, the parking brakes may be controlled by a lever. Use the parking brakes whenever you park.

Caution. Never push the brake pedal down when the spring brakes are on. If you do, the brakes could be damaged by the combined forces of the springs and the air pressure. Many brake systems are designed so this will not happen. But not all systems are set up that way, and those that are may not always work. It is much better to develop the habit of not pushing the brake pedal down when the spring brakes are on.

Modulating control valves. In some vehicles a control handle on the dash board may be used to apply the spring brakes gradually. This is called a modulating valve. It is spring loaded so you have a feel for the braking action. The more you move the control lever, the harder the spring brakes come on. They work this way so you can control the spring brakes if the service brakes fail. When parking a vehicle with a modulating control valve, move the lever as far as it will go and hold it in place with the locking device.

Dual parking control valves. When main air pressure is lost, the spring brakes come on. Some vehicles, such as buses, have a separate air tank which can be used to release the spring brakes. This is so you can move the vehicle in an emergency. One of the valves is a push-pull type and is used to put on the spring brakes for parking. The other valve is spring loaded in the "out" position. When you push the control in, air from the separate air tank releases the spring brakes so you can move. When you release the button, the spring brakes come on again. There is only enough air in the separate tank to do this a few times. Therefore, plan carefully when moving. Otherwise, you may be stopped in a dangerous location when the separate air supply runs out.

Test Your Knowledge
1. Why must air tanks be drained? 2. What is a supply pressure guage used for? 3. All vehicles with air brakes must have a low air pressure warning signal. True or false? 4. What are spring brakes? 5. Front wheel brakes are good under all conditions. True or false?
These questions may be on your test. If you can't answer all, reread Section 5.1

5.2 Dual Air Brake Systems

Most newer heavy-duty vehicles use dual air brake systems for safety. A dual air brake system has two separate air brake systems which use a single set of brake controls. Each system has its own air tanks, hoses, lines, etc. One system typically operates the regular brakes on the rear axle or axles. The other system operates the regular brakes on the front axle (and possibly one rear axle). Both systems supply air to the trailer (if there is one). The first system is called the "primary" system. The other is called the "secondary" system.

Before driving a vehicle with a dual air system, allow time for the air compressor to build up a minimum of 100 psi pressure in both the primary and secondary systems. Watch the primary and secondary air pressure gauges (or needles, if the system has two needles in one gauge). Pay attention to the low-air-pressure warning light and buzzer. The warning light and buzzer should shut off when air pressure in both systems rises to a value set by the manufacturer. This value must be greater than 60 psi.

The warning light and buzzer should come on before the air pressure drops below 60 psi in either system. If this happens while driving you should stop right away and safely park the vehicle. If one air system is very low on pressure, either the front or the rear brakes will not be operating fully. This means it will take you longer to stop. Bring the vehicle to a safe stop, and have the air brake system fixed.

5.3 Inspecting Air Brake Systems

You should use the basic seven-step inspection procedure described in Section 2 to inspect your vehicle. There are more things to inspect on a vehicle with air brakes than one without them. We discuss these things below, in the order that they fit into the seven-step method.

· ***During Step 2 Engine Compartment Checks***

Check Air Compressor Drive Belt (if compressor is belt driven). If the air compressor is belt-driven, check the condition and tightness of the belt. The belt should be in good condition.

· ***During Step 5 Walkaround Inspection***

Check Manual Slack Adjusters on S-Cam Brakes. Park on level ground and chock the wheels to prevent the vehicle from moving. Turn off the parking brakes so you can move the slack adjusters. Use gloves and pull hard on each slack adjuster that you can get to. If a slack adjuster moves more than about one inch where the push rod attaches to it, it probably needs adjustment. Adjust it or have it adjusted. Vehicles with too much brake slack can be very hard to stop. Out-of-adjustment brakes are the most common problem found in roadside inspections. Be safe; check the slack adjusters.

Check Brake Drums (or Discs), Linings, and Hoses. Brake drums (or discs) must not have cracks longer than one half the width of the friction area. Linings (friction material) must not be loose, soaked with oil or grease. They must not be dangerously thin. Mechanical parts must be in place, not broken or missing. Check the air hoses connected to the brake chambers to make sure they aren't cut or worn due to rubbing.

Do the following checks instead of the hydraulic brake check shown in Section Two "Step 7: Check Brake System."

Test Low Pressure Warning Signal. Shut the engine off when you have enough air pressure that the low pressure warning signal is not on. Turn the electrical power on and step on and off the brake pedal to reduce air tank pressure. The low air pressure warning signal must come on before the pressure drops to less than 60 psi in the air tank (or tank with the lowest air pressure, in dual air systems).

If the warning signal doesn't work, you could lose air pressure and you would not know it. This could cause sudden emergency braking in a single circuit air system. In dual systems the stopping distance will be increased. Only limited braking can be done before the spring brakes come on.

Check That the Spring Brakes Come on Automatically. Chock the wheels, release the parking brakes when you have enough air pressure to do it, and shut the engine off. Step on and off the brake pedal to reduce the air tank pressure. The "parking brake" knob should pop out when the air pressure falls to the manufacturer's specification (usually in a range between 20-40 psi). This causes the spring brakes to come on.

Check Rate of Air Pressure Buildup. With the engine at operating RPM, the pressure should build from 85 to 100 psi within 45 seconds in dual air systems. (If the vehicle has larger than minimum air tanks, the buildup time can be longer and still be safe. Check the manufacturer's specifications.) In single air systems (pre 1975), typical requirements are pressure buildup from 50 to 90 psi within 3 minutes with the engine at an idle speed of 600-900 RPM.

If air pressure does not build up fast enough, your pressure may drop too low during driving, requiring an emergency stop. Don't drive until you get the problem fixed.

Test Air Leakage Rate. With a fully-charged air system (typically 125 psi), turn off the engine, release the service brake, and time the air pressure drop. The loss rate should be less than 2 psi in one minute for single vehicles, less than 3 psi in one minute for combination vehicles. Then apply 90 psi or more with the brake pedal. After the initial pressure drop, if the air pressure falls more than 3 psi in one minute for single vehicles (more than 4 psi for combination vehicles) the air loss rate is too much. Check for air leaks and fix before driving the vehicle. Otherwise, you could lose your brakes while driving.

Check Air Compressor Governor Cut-in and Cut-out Pressures. Pumping by the air compressor should start at about 100 psi and stop at about 125 psi. (Check manufacturer's specifications.) Run the engine at a fast idle. The air governor should cut-out the air compressor at about the manufacturer's specified pressure. The air pressure shown by your gauge(s) will stop rising. With the engine idling, step on and off the brake to reduce the air tank pressure. The compressor should cut-in at about the manufacturer's specified cut-in pressure. The pressure should begin to rise.

If the air governor does not work as described above, it may need to be fixed. A governor that does not work right may not keep enough air pressure for safe driving.

Test Parking Brake. Stop the vehicle, put the parking brake on, and gently pull against it in a low gear to test that the parking brake will hold.

Test Service Brakes. Wait for normal air pressure, release the parking brake, move the vehicle forward slowly (about 5 mph), and apply the brakes firmly using the brake pedal. Note any vehicle "pulling" to one side, unusual feel, or delayed stopping action.

This test may show you problems which you otherwise wouldn't know about until you needed the brakes on the road.

Test Your Knowledge
1. What is a dual air brake system? 2. What are slack adjusters? 3. How can you check slack adjusters? 4. How can you test the low pressure warning signal? 5. How can you check that the spring brakes come on automatically? 6. What are the maximum leakage rates?
These questions may be on your test. If you can't answer all, reread Sections 5.2 and 5.3.

5.4 Using Air Brakes

· ***Normal Stops***

Push the brake pedal down. Control the pressure so the vehicle comes to a smooth, safe stop. If you have a manual transmission, don't push the clutch in until the engine RPM is down close to idle. When stopped, select a starting gear.

· ***Emergency Stops***

You should brake so you can steer and so your vehicle stays in a straight line. Use one of the following two methods.

Controlled braking. This method is also called "squeeze" braking. Put on the brakes as hard as you can **without** locking the wheels. Do not turn the steering wheel while doing this. If you need to make large steering adjustments or if you feel the wheels sliding, release the brakes. Brake again as soon as the tires get traction.

Stab braking. a) Press on the brake pedal as hard as you can. b) Release the brakes when the wheels lock up. c) As soon as the wheels start rolling, put on the brakes fully again. It can take up to one second for the wheels to start rolling after you release the brakes. Make sure you stay off the brakes long enough to get the wheels rolling again. Otherwise the vehicle may not stay in a straight line.

· ***Stopping Distance***

We talked about stopping distance in Section 2 under "Speed and Stopping Distance." With air brakes there is an added delay: the time required for the brakes to work after the brake pedal is pushed. With hydraulic brakes (used on cars and light/medium trucks), the

brakes work instantly. However, with air brakes, it takes a little time (one half second or more) for the air to flow through the lines to the brakes. Thus, the total stopping distance for vehicles with air brake systems is made up of **four** different factors.

Perception Distance
+ Reaction Distance
+ Brake Lag Distance
+ Effective Braking Distance

= Total Stopping Distance

The air brake lag distance at 55 mph on dry pavement adds about 32 feet. So at 55 mph for an average driver under **good** traction and brake conditions, the total stopping distance is over 300 feet. This is longer than a football field.

Braking on Downgrades

When you use the brakes, they get hot. Brakes can take a lot of heat. However, brakes will stop working if there is too much heat. Excessive heat is caused by trying to slow down from too high a speed too many times or too quickly. Brakes will fade when they get too hot (You will have to push harder on the pedal to get the same stopping force). They can fade so badly they will not slow you down.

The right way to go down long grades is to use a low gear and go slow enough that a fairly light, steady use of the brakes will keep you from speeding up. If you go slow enough, the brakes will be able to get rid of the heat so they will work as they should.

Some people believe that using the brakes hard going downhill but letting up on them from time to time will allow them to cool. Tests have shown this is **not** true. Brakes cool very slowly, so the cooling between hard brakings is not enough to prevent overheating. Also, the vehicle picks up speed when the brakes are let up, which means more hard braking to slow it back down. Braking in this way, on-and-off, builds up more heat than the light, steady method does. Therefore, go slow enough, use the right gear, and maintain light, steady pressure on the brakes.

It is always important for the brakes to be adjusted right. However, it is **especially important when going down steep grades**. In addition to proper slack adjustment, the air brake system should be balanced, to give about the same braking at each of the wheels. Otherwise, some brakes will do more work than others. They will heat up and lose some of their stopping power. Brake balance can be tested and fixed by good air brake mechanics.

Low Air Pressure Warning

If the low air pressure warning comes on, **stop and safely park your vehicle as soon as possible**. There might be an air leak in the system. Controlled braking is possible only while enough air remains in the air tanks. The spring brakes will come on when the air pressure drops into the range 20 to 45 psi. A heavily loaded vehicle will take a long distance to stop, because the spring brakes do not work on all axles. Lightly loaded vehicles or vehicles on slippery roads may skid out of control when the spring brakes come on. It is much safer to stop while there is enough air in the tanks to use the foot brake.

Parking Brakes

Any time you park, use the parking brakes, except as noted below. Pull the parking brake control knob out to apply the parking brakes, push it in to release them. The control will be a yellow, diamond-shaped knob labeled "parking brakes" on newer vehicles. On older vehicles, it may be a round blue knob or some other shape (including a lever that swings from side to side or up and down).

Don't use the parking brakes if the brakes are very hot (from just having come down a steep grade), or if the brakes are very wet in freezing temperatures. If they are used while they are very hot, they can be damaged by the heat. If they are used in freezing temperatures when the brakes are very wet, they can freeze so the vehicle can not move. Use wheel chocks to hold the vehicle. Let hot brakes cool before using the parking brakes. If the brakes are wet, use the brakes lightly while driving in a low gear to heat and dry them.

If your vehicle does not have automatic air tank drains, drain your air tanks at the end of each working day to remove moisture and oil. Otherwise, the brakes could fail.

Never leave your vehicle unattended without applying the parking brakes or chocking the wheels. Your vehicle might roll away and cause injury and damage.

Test Your Knowledge

1. Do air brakes work instantly, like hydraulic brakes?
2. Why is it important to go slow on downgrades?
3. Using the brakes hard going downhill is OK if you let up on the pedal frequently to cool the brakes. True or false?
4. If you're gone only a short time, you don't need to use the parking brake. True or false?
5. How often should you drain air tanks?

These questions may be on your test. If you can't answer all, reread Section 5.4.

Section 6: Combination Vehicles

This section provides information needed to pass the tests for combination vehicles (tractor-trailer, doubles, triples, straight truck and trailer). The information is only to give you the minimum knowledge needed for driving common combination vehicles.

This Section Covers

- ***Driving Combinations***
- ***Coupling & Uncoupling***
- ***Inspecting Combinations***

6.1 Driving Combination Vehicles Safely

Combination vehicles are usually heavier, longer, and require more driving skill than single commercial vehicles. This means that drivers of combination vehicles need more knowledge and skill than drivers of single vehicles. In this section, we talk about some important safety factors that apply specifically to combination vehicles.

- ***Rollover Risks***

More than half of truck driver deaths in crashes are from truck rollovers. When more cargo is piled up in a truck, the "center of gravity" moves higher up from the road. The truck becomes easier to turn over. Fully loaded rigs are 10 times more likely to roll over in a crash than empty rigs.

Do the following two things to help prevent rollover: **keep the cargo as close to the ground as possible, and go slow around turns.** Keeping cargo low is even more important in combination vehicles than in straight trucks. Also, keep the load centered on your rig. If the load is to one side so it makes a trailer lean, a rollover is more likely. Make sure your cargo is centered and spread out as much as possible. (See Section 3 of this manual.)

Rollovers happen when you turn too fast. Go slow around corners, onramps, and offramps. Avoid quick lane changes, especially when fully loaded.

- ***Steer Gently***

Trucks with trailers have a dangerous "crack-the-whip" effect. When you make a quick lane change, the crack-the-whip effect can turn the trailer over. There are many accidents where only the trailer has overturned.

"Rearward amplification" causes the crack-the-whip effect. Figure 6-1 shows eight types of combination vehicles and the rearward amplification each has in a quick lane change. Rigs with the least crack-the-whip effect are shown at the top and those with the most at the bottom. Rearward amplification of 2.0 in the chart means that the rear trailer is twice as likely to turn over as the tractor. You can see that triples have a rearward amplification of 3.5. This means you can roll the last trailer of triples 3.5 times as easily as a five-axle tractor-semi.

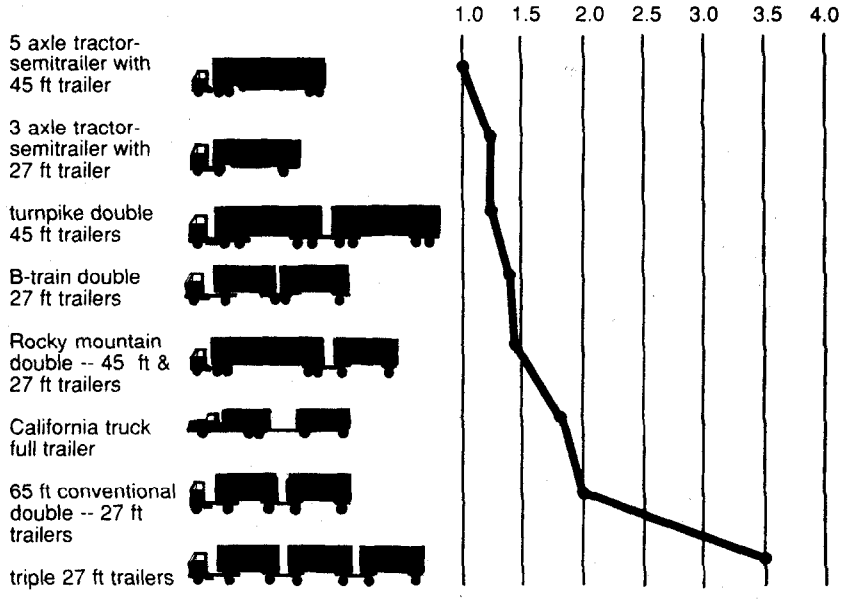

Figure 6-1
Influence of Combination Type on Rearward Amplification

(from R. D. Ervin, R. L. Nisonger, C. C. MacAdam, and P. S. Fancher, "Influence of size and weight variables on the stability and control properties of heavy trucks," U. of Michigan Trans. Research Institute, 1983.)

Steer gently and smoothly when you are pulling trailers. If you make a sudden movement with your steering wheel, you could tip over a trailer. Follow far enough behind other vehicles (at least one second for each ten feet of your vehicle length, plus another second if going over 40 mph). Look far enough down the road to avoid being surprised and having to make a sudden lane change. At night, drive slow enough to see obstacles with your headlights before it is too late to change lanes or stop gently. Slow down to a safe speed **before** going into a turn.

· ***Brake Early***

Control your speed whether fully loaded or empty. Large combination vehicles that are empty take longer to stop than when they are fully loaded. When lightly loaded, the very stiff suspension springs and strong brakes give poor traction and make it very easy to lock up the wheels. Your trailer can swing out and strike other vehicles. Your tractor can jacknife very quickly (Figure 6-2). You also must be very careful about driving "bobtail" tractors (tractors without semitrailers). Tests have shown that bobtails can be very hard to stop smoothly. It takes them longer to stop than a tractor-semitrailer loaded to maximum gross weight.

In any combination rig, allow lots of following distance and look far ahead, so you can brake early. Don't be caught by surprise and have to make a "panic" stop.

· ***Prevent Trailer Skids***

When the wheels of a trailer lock up, the trailer will tend to swing around. This is more likely to happen when the trailer is empty or lightly loaded. This type of jackknife is often called a "trailer jackknife." This is shown in Figure 6-3.

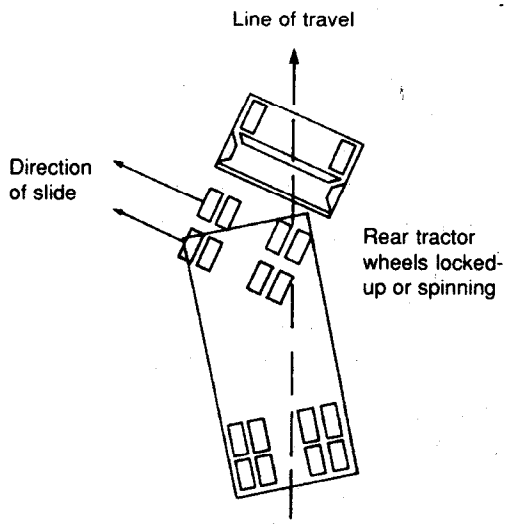

Figure 6-2
Tractor Jackknife

The procedure for stopping a trailer skid is as follows:

Recognize the skid. The earliest and best way to recognize that the trailer has started to skid is by seeing it in your mirrors. Any time you apply the brakes hard, check the mirrors to make sure the trailer is staying where it should be. Once the trailer swings out of your lane, it's very difficult to prevent a jackknife.

Stop using the brake. Release the brakes to get traction back. Do **not** use the trailer hand brake (if you have one) to "straighten out the rig." This is the wrong thing to do since it is the brakes on the trailer wheels that caused the skid in the first place. Once the trailer wheels grip the road again, the trailer will start to follow the tractor and straighten out.

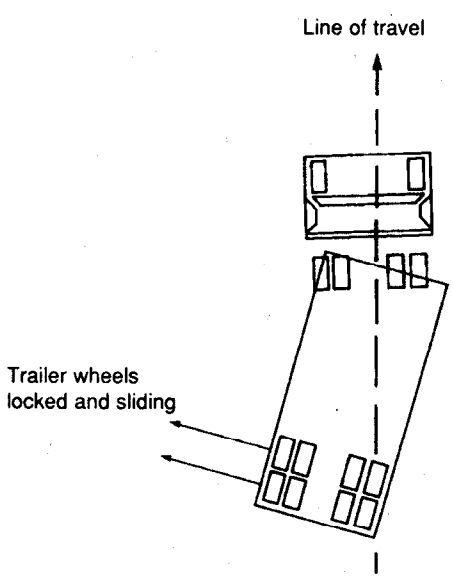

Figure 6-3
Trailor Jackknife

Turn Wide

When a vehicle goes around a corner, the rear wheels follow a different path than the front wheels. This is called **offtracking** or "cheating." Figure 6-4 shows how offtracking causes the path followed by a tractor-semi to be wider than the rig itself. Longer vehicles will offtrack more. The rear wheels of the powered unit (truck or tractor) will offtrack some, and the rear wheels of the trailer will offtrack even more. If there is more than one trailer, the rear wheels of the last trailer will offtrack the most. Steer the front end wide enough around a corner so the rear end does not run over the curb, pedestrians, other vehicles, etc. However, keep the rear of your vehicle close to the curb. This will stop other drivers from passing you on the right. If you cannot complete your turn without entering another traffic lane, turn wide as you **complete the turn** (Figure 6-5). This is better than swinging wide to the left before starting the turn because it will keep other drivers from passing you on the right. If drivers pass on the right, you might crash into them when you turn.

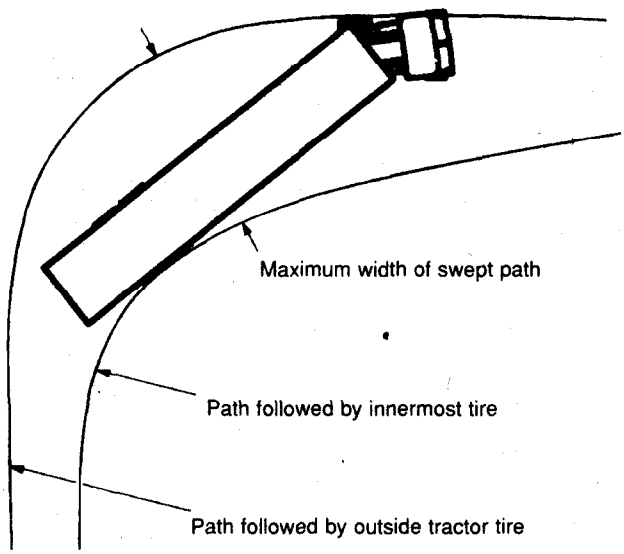

Figure 6-4
Offtracking in a 90 degree turn

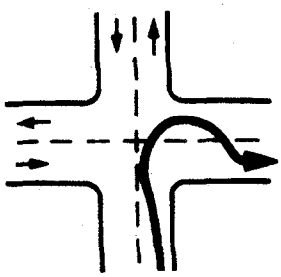

Figure 6-5
Do this so cars don't try to pass you on the right

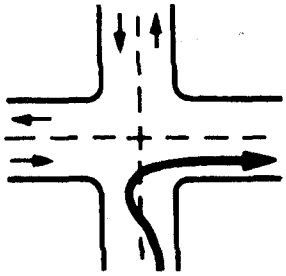

Figure 6-6
Don't do this!

Take special care when pulling two and three trailers. There are more things that can go wrong, and doubles/triples are less stable than other commercial vehicles. Some areas of concern are discussed below.

Take Special Care With Doubles and Triples

Inspect Completely. There are more critical parts to check when you have two or three trailers. Check them all. Follow the procedures described later in this section.

Look Far Ahead. Doubles and triples must be driven very smoothly to avoid rollover or jacknife. Therefore **look far ahead** so you can slow down or change lanes gradually when necessary.

Manage Space. Doubles and triples take up more space than other commercial vehicles. They are not only longer, but also need more space because they can't be turned or stopped suddenly. Allow more following distance. Make sure you have large enough gaps before entering or crossing traffic. Be certain you are clear at the sides before changing lanes.

Be More Careful In Adverse Conditions. In bad weather, slippery conditions, and mountain driving, you must be especially careful if you drive double and triple bottoms. You will have greater length and more dead axles to pull with your drive axles than other drivers. There is more chance for skids and loss of traction.

6.2 Combination Vehicle Air Brakes

You should study "Section 5: Single Vehicle Air Brakes" before reading this. In combination vehicles the braking system has parts to control the trailer brakes, in addition to the parts described in Section 5. These parts are described below.

Trailer Hand Valve

The trailer hand valve (also called the trolley valve or Johnson bar) works the trailer brakes. The trailer hand valve should be used only to test the trailer brakes. Do **not** use it in driving because of the danger of making the trailer skid. The foot brake sends air to **all** of the brakes on the vehicle (including the trailer(s)). There is much less danger of causing a skid or jackknife when using just the foot brake.

Never use the hand valve for parking, because all the air might leak out, unlocking the brakes (in trailers that don't have spring brakes). Always use the **parking brakes** when parking. If the trailer does not have spring brakes, use wheel chocks to keep the trailer from moving.

Test Your Knowledge
1. What two things are important to prevent rollover? 2. When you turn suddenly while pulling doubles, which trailer is most likely to turn over? 3. Why should you not use the trailer hand brake to straighten out a jackknifing trailer? 4. What is offtracking? 5. Why should you not turn like it shows in Figure 6-6?
These questions may be on your test. If you can't answer all, reread Section 6.1.

Tractor Protection Valve

The tractor protection valve keeps air in the tractor or truck should the trailer break away or develop a bad leak. The tractor protection valve is controlled by the "trailer air supply" control valve in the cab. The control valve allows you to open and shut the tractor protection valve. The tractor protection valve will close automatically if air pressure is low (in the range of 20 to 45 psi). When the tractor protection valve closes, it stops any air from going out of the tractor. It also lets the air out of the trailer emergency line. This causes the trailer emergency brakes to come on. (Emergency brakes are covered later.)

Trailer Air Supply Control

The trailer air supply control on newer vehicles is a red 8-sided knob which you use to control the tractor protection valve. You push it in to supply the trailer with air, and pull it out to shut the air off and put on the trailer emergency brakes. The valve will pop out (thus closing the tractor protection valve) when the air pressure drops into the range 20 to 45 psi. Tractor protection valve controls or "emergency" valves on older vehicles may not operate automatically. There may be a lever rather than a knob. The "normal" position is used for pulling a trailer. The "emergency" position is used to shut the air off and put on the trailer emergency brakes.

Trailer Air Lines

Every combination vehicle has two air lines, the **service** line and the **emergency** line. They run between each vehicle (tractor to trailer, trailer to dolly, dolly to second trailer, etc.)

Service Air Line. The **service** line (also called the control line or signal line) carries air which is controlled by the foot brake or the trailer hand brake. Depending on how hard you press the foot brake or hand valve, the pressure in the service line will similarly change. The service line is connected to **relay valve(s)** on the trailer(s) to apply more or less pressure to the trailer brakes. The relay valve connects the trailer air tanks to the trailer air brakes. As pressure builds up in the service line, the relay valve opens and sends air pressure from the trailer air tank to the trailer brake chambers, thus putting on the trailer brakes.

Emergency Air Line. The emergency line (also called the supply line) has two purposes. First, it supplies air to the trailer air tanks. Secondly, the emergency line controls the emergency brakes on combination vehicles. **Loss of air pressure** in the emergency line causes the trailer emergency brakes to come on. The pressure loss could be caused by a trailer breaking loose, thus tearing apart the emergency air hose. Or it could be caused by a hose, metal tubing, or other part which breaks, letting the air out. When the emergency line loses pressure, it also causes the tractor protection valve to close (the air supply knob will pop out).

Emergency lines are often coded with the color **red** (red hose, red couplers, or other parts) to keep from getting them mixed up with the blue service line.

Hose Couplers (Glad Hands)

Glad hands are coupling devices used to connect the service and emergency air lines from the truck or tractor to the trailer. The couplers have a rubber seal which prevents air from escaping. Clean the couplers and rubber seals before a connection is made. When connecting the glad hands, press the two seals together with the couplers at a 90 degree angle to each other. A turn of the glad hand attached to the hose will join and lock the couplers.

Some vehicles have "dead end" or dummy couplers to which the hoses may be attached when they are not in use. This will prevent water and dirt from getting into the coupler and the air lines. Use the dummy couplers when the air lines are not connected to a trailer. If there are no dummy couplers, the glad hands can sometimes be locked together (depending on the couplings). It is very important to keep the air supply clean.

When coupling, make sure to couple the proper glad hands together. To help avoid mistakes, colors are sometimes used. Blue is used for the service lines and red for the emergency (supply) lines. Sometimes, metal tags are attached to the lines with the words "service" and "emergency" stamped on them.

If you do cross the air lines, supply air will be sent to the service line instead of going to charge the trailer air tanks. Air will not be available to release the trailer spring brakes (parking brakes). If the spring brakes don't release when you push the trailer air supply control, check the air line connections.

Older trailers do not have spring brakes. If the air supply in the trailer air tank has leaked away, there will be no emergency brakes, and the trailer wheels will turn freely. If you crossed the air lines, you could drive away but you wouldn't have trailer brakes. **This would be very dangerous.** Always test the trailer brakes before driving, with the hand valve or by pulling the air supply (tractor protection valve) control. Pull gently against them in a low gear to make sure the brakes work.

Trailer Air Tanks

Each trailer and converter dolly has one or more air tanks. They are filled by the **emergency (supply) line** from the tractor. They provide the air pressure used to operate trailer brakes. Air pressure is sent from the air tanks to the brakes by relay valves. The pressure in the **service line** tells how much pressure the relay valves should send to the trailer brakes. The pressure in the service line is controlled by the brake pedal (and the trailer hand brake).

It is important that you don't let water and oil build up in the air tanks. If you do, the brakes may not work right. Each tank has a drain valve on it, and you should drain each tank every day. If your tanks have automatic drains, they will keep most moisture out. But you should still open the drains to make sure.

Shut-Off Valves

Shut-off valves (also called cut-out cocks) are used in the service and supply air lines at the back of trailers used to tow other trailers. These valves permit closing the air lines off when another trailer is not being towed. You must check that all shut-off valves are in the **open** position except the ones at the back of the last trailer, which must be **closed**.

Trailer Service, Parking and Emergency Brakes

Newer trailers have spring brakes just like trucks and truck tractors. However, converter dollies and trailers built before 1975 are not required to have spring brakes. Those that do not have spring brakes have emergency brakes which work from the air stored in the trailer air tank. The emergency brakes come on whenever air pressure in the emergency line is lost. **These trailers have no parking brake.** The emergency brakes come on whenever the air supply knob is pulled out or the trailer is disconnected. But the

brakes will hold only as long as there is air pressure in the trailer air tank. Eventually, the air will leak away, and then there will be no brakes. Therefore, **it is very important for safety that you use wheel chocks when you park trailers without spring brakes.**

A major leak in the **emergency** line will cause the tractor protection valve to close and the trailer emergency brakes to come on.

You may not notice a major leak in the **service** line until you try to put the brakes on. Then, the air loss from the leak will lower the air tank pressure quickly. If it goes low enough, the trailer emergency brakes will come on.

Test Your Knowledge
1. Why should you not use the trailer hand valve while driving? 2. Describe what the trailer air supply control does. 3. *Describe what the service line is for.* 4. What is the emergency air line for? 5. Why should you use chocks when parking a trailer without spring brakes?
These questions may be on your test. If you can't answer all, reread Section 6.2.

6.3 Coupling and Uncoupling

Knowing how to couple and uncouple correctly is basic to safe operation of combination vehicles. Wrong coupling and uncoupling *can be very dangerous. General coupling and uncoupling steps are* listed below. There are differences between different rigs, so learn the details of coupling and uncoupling the truck(s) you will operate.

Coupling Tractor-Semitrailers

Step 1. Inspect Fifth Wheel

- Check for damaged/missing parts.
- Check to see that mounting to tractor is secure, no cracks in frame, etc.
- Be sure that the fifth wheel plate is greased as required. Failure to keep the fifth wheel plate lubricated could cause steering problems because of friction between the tractor and trailer.
- *Check if fifth wheel is in proper position for coupling.*
  -Wheel tilted down towards rear of tractor.
  -Jaws open.
  -Safety unlocking handle in the automatic lock position.
- If you have a sliding fifth wheel, make sure it is locked
- Make sure the trailer kingpin is not bent or broken.

Step 2. Inspect Area and Chock Wheels

- Make sure area around the vehicle is clear.
- Be sure trailer wheels are chocked or spring brakes are on
- Check that cargo (if any) is secured against movement due to tractor being coupled to the trailer.

Step 3. Position Tractor

- Put the tractor directly in front of the trailer. (Never back under the trailer at an angle, because you might push the trailer sideways and break the landing gear.)
- Check position, using outside mirrors, by looking down both sides of the trailer.

Step 4. Back Slowly

- Back until fifth wheel just touches the trailer.
- Don't hit the trailer.

Step 5. Secure Tractor

- Put on the parking brake.
- Put transmission in neutral.

Step 6. Check Trailer Height

- The trailer should be low enough that it is raised slightly by the tractor when the tractor is backed under it. Raise or lower the trailer as needed. (If trailer is too low, tractor may strike and damage nose of trailer; if trailer is too high, **it may not couple correctly.**)
- Check that the kingpin and fifth wheel are aligned.

Step 7. Connect Air Lines to Trailer

- Check glad hand seals and connect tractor emergency air line to trailer emergency glad hand.
- Check glad hand seals and connect tractor service air line to trailer service glad hand.
- Make sure air lines are safely supported where they won't be crushed or caught while tractor is backing under the trailer.

Step 8. Supply Air to Trailer

- From cab, push in "air supply" knob or move tractor protection valve control from the "emergency" to the "normal" position to supply air to the trailer brake system.
- Wait until the air pressure is normal.
- Check brake system for crossed air lines.
  - -Shut engine off so you can hear the brakes.
  - -apply and release trailer brakes, listen for sound of trailer brakes being applied and released. You should hear the brakes move when applied and air escape when the brakes are released.
  - -Check air brake system pressure gauge for signs of major air loss.
- When you are sure trailer brakes are working, start engine.
- Make sure air pressure is up to normal.

Step 9. Lock Trailer Brakes

- Pull out the "air supply" knob, or move the tractor protection valve control from "normal" to "emergency."

Step 10. Back Under Trailer

- Use lowest reverse gear.
- Back tractor slowly under trailer to avoid hitting the kingpin too hard.
- Stop when the kingpin is locked into the fifth wheel.

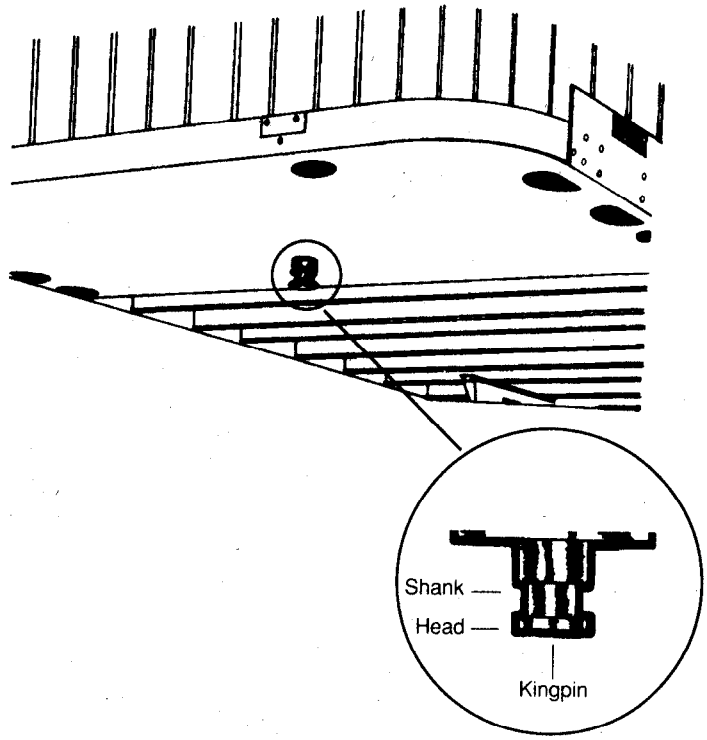

Figure 6-7
Trailer Kingpin

Step 11. Check Connection for Security

- Raise trailer landing gear **slightly** off ground.
- Pull tractor **gently** forward while the trailer brakes are still locked to check that the trailer is locked onto the tractor.

Step 12. Secure Vehicle

- Put transmission in neutral.
- Put parking brakes on
- Shut off engine and **take key with you so someone else won't move truck while you are under it.**

Step 13. Inspect Coupling

- Use a flashlight if necessary.
- Make sure there is **no space between upper and lower fifth wheel**. If there is space, something is wrong (kingpin may be on **top** of closed fifth wheel jaws; trailer would come loose very easily).
- Go under trailer and look into the back of the fifth wheel. Make sure the fifth wheel jaws have closed around the shank of the kingpin (see Figure 6-7).
- Check that the locking lever is in the "lock" position.
- Check that the safety catch is in position over locking lever. (On some fifth wheels the catch must be put in place by hand.)
- If the coupling isn't right, **don't drive the coupled unit**; get it fixed.

Step 14. Connect the Electrical Cord and Check Air Lines

- Plug the electrical cord into the trailer and fasten the safety catch.
- Check both air lines and electrical line for signs of damage.
- Make sure air and electrical lines will not hit any moving parts of vehicle.

Step 15. Raise Front Trailer Supports (Landing Gear)

- Use low gear range (if so equipped) to begin raising the landing gear. Once free of weight, switch to the high gear range.
- Raise the landing gear all the way up. (Never drive with landing gear only part way up as it may catch on railroad tracks or other things.)
- After raising landing gear, secure the crank handle safely
- When full weight of trailer is resting on tractor:
  - -Check for enough clearance between rear of tractor frame and landing gear. (When tractor turns sharply it must not hit landing gear.)
  - -Check that there is enough clearance between the top of the tractor tires and the nose of the trailer.

Step 16. Remove Trailer Wheel Chocks

- Remove and store wheel chocks in a safe place.

Uncoupling Tractor-Semitrailers

The following steps will help you to uncouple safely.

Step 1. Position Rig

- Make sure surface of parking area can support weight of trailer.
- Have tractor lined up with the trailer. (Pulling out at an angle can damage landing gear.

Step 2. Ease Pressure on Locking Jaws

- Shut off trailer air supply to lock trailer brakes.
- Ease pressure on fifth wheel locking jaws by backing up gently (this will help you release the fifth wheel locking lever).
- Put parking brakes on while tractor is pushing against the kingpin. This will hold rig with pressure off the locking jaws.

Step 3. Chock Trailer Wheels

- Chock the trailer wheels if the trailer doesn't have spring brakes or if you're not sure. (The air could leak out of the trailer air tank, releasing its emergency brakes. The trailer could then move if it didn't have chocks.)

Step 4. Lower The Landing Gear

- If trailer is empty--lower the landing gear until it makes firm contact with ground.
- If trailer is loaded--after the landing gear makes firm contact with the ground, turn crank in low gear a few extra turns; this will lift some weight off the tractor. (Do not lift trailer off the fifth wheel.) This will
  - -make it easier to unlatch fifth wheel;
  - -make it easier to couple next time.

Step 5. Disconnect Air Lines and Electrical Cable

- Disconnect air lines from trailer. Connect air line glad hands to dummy couplers at back of cab, or couple them together.
- Hang electrical cable with plug down to prevent moisture from entering it.
- Make sure lines are supported so they won't be damaged while driving the tractor.

Step 6. Unlock Fifth Wheel

- Raise release handle lock.
- Pull the release handle to "open" position.
- Keep legs and feet clear of the rear tractor wheels to avoid serious injury in case the vehicle moves.

Step 7. Pull Tractor Partially Clear of Trailer

- Pull tractor forward until fifth wheel comes out from under the trailer.
- Stop with tractor frame under trailer (prevents trailer from falling to ground if landing gear should collapse or sink).

Step 8. Secure Tractor

- Apply parking brake.
- Place transmission in neutral.

Step 9. Inspect Trailer Supports

- Make sure ground is supporting trailer.
- Make sure landing gear is not damaged.

Step 10. Pull Tractor Clear of Trailer

- Release parking brakes.
- Check the area and drive tractor clear.

Coupling Twin Trailers

(NOTE: YOU WILL NOT BE TESTED ON COUPLING TWIN TRAILERS UNLESS YOU WANT TO GET A DOUBLE/TRIPLE TRAILER ENDORSEMENT ON YOUR LICENSE)

Secure Second (Rear) Trailer

- If the second trailer doesn't have spring brakes, drive the tractor close to the trailer, connect the emergency line, charge the trailer air tank, and disconnect the emergency line. This will set the trailer emergency brakes (if the slack adjusters are correctly adjusted). Chock the wheels if you have any doubt about the brakes.

Couple Tractor and First Semitrailer as Described Earlier.

> Caution: For safe handling on the road, the more heavily loaded semitrailer must always be in first position behind the tractor. The lighter trailer should be in the rear.

Position Converter Dolly in Front of Second (Rear) Trailer

- Release dolly brakes by opening the air tank petcock. (Or, if the dolly has spring brakes use the dolly parking brake control).
- If distance is not too great, wheel dolly into position by hand so it is in line with the kingpin.
- Or, use tractor and first semitrailer to pick up the converter dolly:
  - -Position combination as close as possible to converter dolly.
  - -Move dolly to rear of first semitrailer and couple it to the trailer.
  - -Lock pintle hook.
  - -Secure dolly support in raised position.

-Pull dolly into position as close as possible to nose of the second semitrailer.
-Lower dolly support.
-Unhook dolly from first trailer.
-Wheel dolly into position in front of second trailer in line with the kingpin.

Connect Converter Dolly to Front Trailer

- Back first semitrailer into position in front of dolly tongue.
- Hook dolly to front trailer.
  -Lock pintle hook.
  -Secure converter gear support in raised position.

Connect Converter Dolly to Rear Trailer

- Make sure trailer brakes are locked and/or wheels chocked.
- Make sure trailer height is correct. (It must be slightly lower than the center of the fifth wheel, so trailer is raised slightly when dolly is pushed under.)
- Back converter dolly under rear trailer.
- Raise landing gear slightly off ground to prevent damage if trailer moves.
- Test coupling by pulling against pin of number two semitrailer.
- Make visual check of coupling. (No space between upper and lower fifth wheel; locking jaws closed on kingpin.)
- Connect safety chains, air hoses and light cords.
- Close converter dolly air tank petcock, and shut-off valves at rear of second trailer (service and emergency shut-offs).
- Open shut-off valves at rear of first trailer (and on dolly if so equipped).
- Raise landing gear completely.
- Charge trailers (push "air supply" knob in) and check for air at rear of second trailer by opening the emergency line shut-off. If air pressure isn't there, something is wrong and the brakes won't work.

- ***Uncoupling Twin Trailers***

(NOTE: YOU WILL NOT BE TESTED ON UNCOUPLING TWINS UNLESS YOU WANT TO GET A DOUBLE/TRIPLE TRAILER ENDORSEMENT ON YOUR LICENSE).

Uncouple Rear Trailer

- Park rig in a straight line on firm level ground.
- Apply parking brakes so rig won't move.
- Chock wheels of second trailer if it doesn't have spring brakes.
- Lower landing gear of second semitrailer enough to remove some weight from dolly.
- Close air shut-offs at rear of first semitrailer (and on dolly if so equipped).
- Disconnect all dolly air and electric lines and secure them.
- Release dolly brakes.
- Release converter dolly fifth wheel latch.
- Slowly pull tractor, first semitrailer and dolly forward to pull dolly out from under rear semitrailer.

Uncouple Converter Dolly

- Lower dolly landing gear.
- Disconnect safety chains.
- Apply converter gear spring brakes or chock wheels.
- Release pintle hook on first semitrailer.
- Slowly pull clear of dolly.

Caution: Never unlock the pintle hook with the dolly still under the rear trailer. The dolly tow bar may fly up, possibly causing injury, and making it very difficult to re-couple.

Coupling & Uncoupling Triple Trailers

(NOTE: YOU WILL NOT BE TESTED ON THIS UNLESS YOU WANT TO GET A DOUBLE/TRIPLE TRAILER ENDORSEMENT ON YOUR LICENSE).

Couple Second and Third Trailers

- Couple second and third trailers using the method for coupling doubles.
- Uncouple tractor and pull away from second and third trailers.

Couple Tractor/First Semitrailer to Second/Third Trailers

- Couple tractor to first trailer. Use the method already described for coupling tractor-semitrailers.
- Move converter dolly into position and couple first trailer to second trailer using the method for coupling doubles. Triples rig is now complete.

Uncouple Triple-Trailer Rig

- Uncouple third trailer by pulling the dolly out, then unhitching the dolly, using the method for uncoupling doubles.
- Uncouple remainder of rig as you would any double-bottom rig using the method already described.

Coupling & Uncoupling Other Combinations

The methods described so far apply to the more common tractor-trailer combinations. However, there are other ways of coupling and uncoupling the many types of truck-trailer and tractor-trailer combinations that are in use. There are too many to cover in this manual. Learn the right way to couple the vehicle(s) you will drive according to the manufacturer and/or owner.

Test Your Knowledge

1. What might happen if the trailer is too high when you try to couple?
2. After coupling, how much space should be between the upper and lower fifth wheel?
3. You should look into the back of the fifth wheel to see if it is locked onto the kingpin. True or false?
4. To drive you need to raise the landing gear only until it just lifts off the pavement. True or false?
5. What is a converter dolly?
6. What are shut-off valves?
7. Why should you pull a dolly out from under a trailer before you disconnect it from the trailer in front?
8. Where should the heaviest trailer be in a set of doubles?

These questions may be on your test. If you can't answer all, reread Section 6.3.

6.4 Inspecting a Combination Vehicle

Use the seven-step inspection procedure described in Section 2 to inspect your combination vehicle. There are more things to inspect on a combination vehicle than on a single vehicle. Many of these additional things are just more of what are on a single vehicle. (For example, tires, wheels, lights, reflectors, etc.). However, there are also some new things to check. These are discussed below.

Additional Things To Check During a Walkaround Inspection

Do these checks in addition to those already listed in Section 2, "Step 5: Do Walkaround Inspection."

Coupling System Areas

Check fifth wheel (lower).
- -Securely mounted to frame.
- -No missing, damaged parts.
- -Enough grease.
- -No visible space between upper and lower fifth wheel.
- -Locking jaws around the shank, **not** the head of kingpin.
- -Release arm properly seated and safety latch/lock engaged.

- Fifth wheel (upper).
  - -Glide plate securely mounted to trailer frame.
  - -Kingpin not damaged.
- Air and electric lines to trailer.
  - -Electrical cord firmly plugged in and secured.
  - -Air lines properly connected to glad hands, no air leaks, properly secured with enough slack for turns.
  - -All lines free from damage.
- Sliding fifth wheel.
  - -Slide not damaged or parts missing.
  - -Properly greased.
  - -All locking pins present and locked in place.
  - -If air powered -- no air leaks.
  - -Check that fifth wheel is not so far forward that tractor frame will hit landing gear, or cab hit the trailer, during turns.

Landing Gear

- Fully raised, no missing parts, not bent or otherwise damaged.
- Crank handle in place and secured.
- If power operated, no air or hydraulic leaks.

Double and Triple Trailers

- Shut-off valves (at rear of trailers, in service and emergency lines):
  - -Rear of front trailers: OPEN.
  - -Rear of last trailer: CLOSED.
  - -Converter dolly air tank drain valve: CLOSED.
- Be sure air lines are supported and glad hands are properly connected.
- If spare tire is carried on converter gear (dolly), make sure it's secured.
- Be sure pintle-eye of dolly is in place in pintle hook of trailer(s).
- Make sure pintle hook is latched.
- Safety chains should be secured to trailer(s).
- Be sure light cords are firmly in sockets on trailers.

Combination Vehicle Brake Check

Do these checks **in addition** to Section 5, Inspecting Air Brake Systems.

Check That Air Flows to All Trailers (Double and Triple Trailers). Use the tractor parking brake and/or chock the wheels to hold the vehicle. Wait for air pressure to reach normal, then push in the red "trailer air supply" knob. This will supply air to the emergency (supply) lines. Use the trailer hand brake to provide air to the service line. Go to the rear of the rig. Open the emergency line shut-off valve at the rear of the last trailer. You should hear air escaping, showing the entire system is charged. Close the emergency line valve. Open the service line valve to check that service pressure goes through all the trailers (this test assumes that the trailer hand brake or the service brake pedal is on), then close the valve. If you do NOT hear air escaping from both lines, check that the shut-off valves on the other trailer(s) and dolly(s) are in the OPEN position. You MUST have air all the way to the back for all the brakes to work.

Test Tractor Protection Valve. Charge the trailer air brake system. (That is, build up normal air pressure and push the "air supply" knob in). Shut the engine off. Step on and off the brake pedal several times to reduce the air pressure in the tanks. The trailer air supply control (also called the tractor protection valve control) should pop out (or go from "normal" to "emergency" position) when the air pressure falls into the pressure range specified by the manufacturer. (Usually within the range of 20 to 45 psi.)

If the tractor protection valve doesn't work right, an air hose or trailer brake leak could drain all the air from the tractor. This would cause the emergency brakes to come on, with possible loss of control.

Test Trailer Emergency Brakes. Charge the trailer air brake system and check that the trailer rolls freely. Then stop and pull out the trailer air supply control (also called tractor protection valve control or trailer emergency valve) or place it in the "emergency" position. Pull gently on the trailer with the tractor to check that the trailer emergency brakes are on.

Test Trailer Service Brakes. Check for normal air pressure, release the parking brakes, move the vehicle forward slowly, and apply trailer brakes with the hand control (trolley valve), if so equipped. You should feel the brakes come on. This tells you the trailer brakes are connected and working. (The trailer brakes should be **tested** with the hand valve but controlled in normal operation with the **foot pedal**, which applies air to the service brakes at all wheels.)

Test Your Knowledge

1. Which shut-off valves should be open and which closed?
2. How can you test that air flows to all trailers?
3. How can you test the tractor protection valve?
4. How can you test the trailer emergency brakes?
5. How can you test the trailer service brakes?

These questions may be on your test. If you can't answer all, reread Section 6.4.

Section 7: Hazardous Materials

Hazardous materials pose a risk to health, safety, and property during transportation. The Hazardous Materials Table lists these materials. The rules sometimes require diamond shaped warning signs on vehicles with hazardous materials. These signs are called placards.

You must have a commercial driver's license with a hazardous materials endorsement before driving vehicles with placards. To get the endorsement you must pass a written test about the hazardous materials transportation rules. Section 7 explains these rules. By studying this section you will learn to recognize hazardous cargo, and to communicate the danger.

Everything you need to know to pass the written test is in this manual. However, this is only a beginning. Most drivers need to know much more on the job. You can learn more by reading the rules in State and Federal Regulations. You can also learn more by attending training courses offered by your employer or others. Government and industry publishers sell copies of the rules. Union or company offices often have copies of the rules for driver use. Find out where you can get your own copy to use on the job.

Drivers must have special training before they transport flammable cryogenic liquids or highway route controlled quantities of radioactive material. Each driver's employer provides the training. The driver carries a dated certificate of training signed by the employer. Drivers must have had training within the last two years.

Some locations require permits to transport Explosives A & B, or bulk hazardous waste. States and counties may also require drivers to follow special routes. The Federal government may require permits for special hazardous materials cargo (eg., rocket fuel). Find out about permits and special routes for places you drive.

This Section Covers

- ***The Intent of the Regulations***
- ***Driver Responsibilities***
- ***Communication Rules***
- ***Loading & Unloading***
- ***Bulk Tank Loading, Unloading , and Marking***
- ***Driving and Parking Rules***
- ***Emergencies***

7.1 The Intent of the Regulations

- ***Contain the Material***
- ***Communicate the Risk***

Many hazardous materials can injure or kill people. To protect drivers and others, the rules tell shippers how to package safely. Similar rules tell drivers how to load, transport, and unload bulk tanks. These are containment rules.

Shippers must warn drivers and others about a material's hazardous qualities. They put warning labels on packages and describe materials in a way that clearly warns of the risk. There are rules for drivers too. They must warn others if there is an accident or a leak. Placards are another way to communicate the risk.

· ***Assure Safe Drivers and Equipment***

Drivers must pass a written test about transporting hazardous materials. To pass the test, you must know how to

- recognize shipments of hazardous materials
- safely load shipments
- correctly placard your vehicle
- safely transport shipments.

Learn the rules and follow them. Following the rules reduces the risk of injury from hazardous materials. Taking shortcuts by breaking rules is unsafe. Rule breakers can be fined and put in jail.

Inspect your vehicle before and during each trip. Law enforcement officers may stop and inspect your vehicle. They can also check your shipping papers. They will look for a hazardous materials endorsement on your driver's license.

7.2 Hazardous Materials Transportation -- Who Does What?

· ***The Shipper***

The shipper:

- sends products from one place to another by truck, railroad, ship, or airplane
- uses the hazardous materials regulations to decide the product's
  - proper shipping name
  - hazard class
  - identification number
  - correct packaging
  - correct label and markings
  - correct placard
- packages the materials, labels and marks the package, prepares the shipping paper, supplies placards
- certifies on the shipping paper that he has prepared the shipment according to the rules (Unless you are pulling cargo tanks supplied by you or your employer.)

· ***The Carrier***

The carrier:

- takes the shipment from the shipper to its destination
- checks that the shipper correctly named, labeled and marked the shipment
- refuses improper shipments
- reports accidents and incidents involving hazardous materials to the proper government agency

· ***The Driver***

The driver:

- makes sure the shipper has identified, marked, and labeled the product
- refuses leaking shipments
- placards his vehicle when loading, if needed
- safely transports the shipment without delay
- follows all special rules about transporting hazardous material
- keeps hazardous material shipping papers in the proper place

7.3 Communication Rules

· ***Definitions***

Some words and phrases have special meanings when talking about hazardous materials. The meanings may differ from common use. The words and phrases in this section may be on your test. The meanings of other important words are in the glossary at the end of Section 7.

A material's **hazard class** reflects the risks associated with it. There are 22 different hazard classes. Appendix B tells the exact meaning of each hazard class.

Blasting Agent	Non-Flammable Gas
Combustible Liquid	Organic Peroxide
Corrosive Material	ORM-A
Etiologic Agents	ORM-B
Explosive A	ORM-C
Explosive B	ORM-D
Explosive C	ORM-E
Flammable Liquid	Oxidizer
Flammable Gas	Poison A
Flammable Solid	Poison B
Irritating Material	Radioactive Material

The **shipping paper** describes a shipment of hazardous material. Each item description on the shipping paper shows the material's hazard class. Shipping orders, bills of lading, and manifests are all shipping papers. Figure 7-5 shows an example shipping paper.

After an accident or hazardous material leak, you may be unable to speak. Fire fighters and police can prevent more damage or injury if they know the hazards involved. Your life, and the lives of others, may depend on their quickly finding the shipping papers for hazardous cargo. For that reason the rules

- require shippers to describe shipments correctly on shipping papers
- require carriers and drivers to put tabs on shipping papers related to hazardous materials, or keep them on top of other shipping papers
- require drivers to keep shipping papers for hazardous cargo
  - in a pouch on the driver's door, or
  - in clear view within reach while driving, or
  - on the driver's seat when out of the vehicle.

· ***Package Labels***

Shippers put diamond shaped labels on hazardous material packages. These labels warn others of the hazard. If the diamond label won't fit on the package, shippers put the label on a tag. For example, compressed gas cylinders that will not hold a label will have tags or decals. Labels look like the example in Figure 7-1. A chart showing all the labels is at the back of this manual.

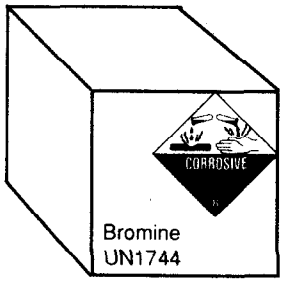

Figure 7-1
Example of Labeled Package

Placards are used to warn others of hazardous cargo. Placards are signs put on the outside of a vehicle to show the hazard class of the cargo. A placarded vehicle must have at least 4 identical placards. They are put on the front, rear, and both sides (see Figure 7-2). Placards must be readable from all four directions. There are 19 DOT specification placards. They are 10 3/4 inches square, turned upright on a point, in a diamond shape. Cargo tanks show the I.D. number of their contents on placards or orange panels.

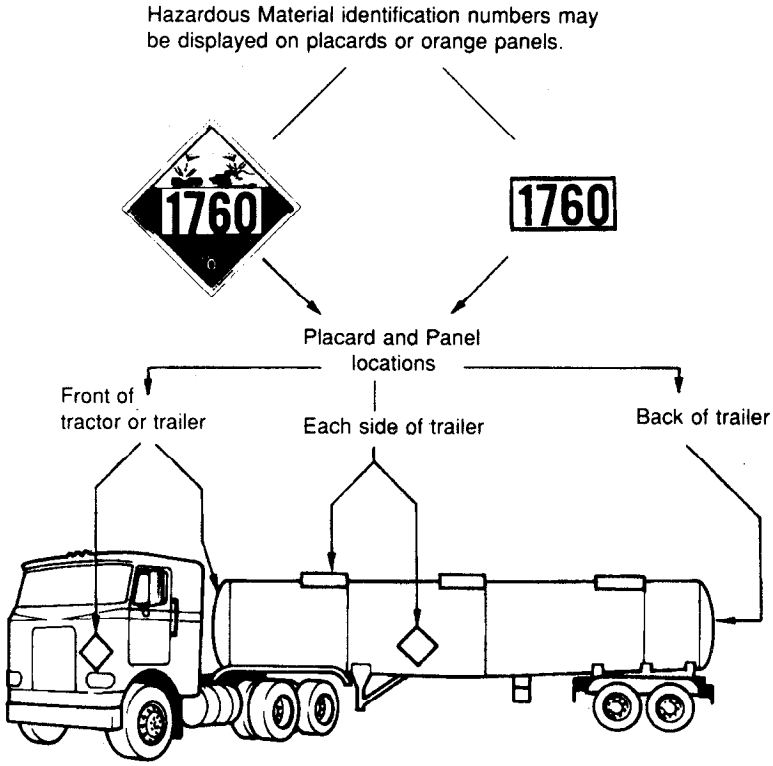

Figure 7-2
Placard and Panel Locations

· ***Lists of Regulated Products***

There are two main lists used by shippers, carriers, and drivers. Before transporting an unfamiliar product, look for its name on both lists. Some products are on both lists, others may be on only one. Always check both

- the Hazardous Materials Table, and
- the List of Hazardous Substances and Reportable Quantities.

The Hazardous Materials Table. Figure 7-3 shows a part of the Hazardous Materials Table. Column 1 tells which shipping mode the entry affects. The next four columns show each material's shipping name, hazard class, ID number, and required labels.

Three different symbols can show in Column 1 of the table.

- + shows the shipping name and hazard class to use, even if the product doesn't match the hazard class definition.
- A means the entry applies only to air shipments that are not a hazardous substance or hazardous waste.
- W means the entry applies only to water shipments that are not a hazardous substance or hazardous waste.

Column 2 shows the names of regulated materials. Entries are in alphabetical order so you can more easily find the right entry. Use the name of the material from the shipping paper. The table shows proper shipping names in regular type. The shipping paper must show proper shipping names. Names shown in *italics* are not proper shipping names. A shipper may only use the names shown in italics in addition to the proper shipping name.

Column 3 shows each material's hazard class or the word "Forbidden." Never transport a material that is "Forbidden." A material's hazard class is the key to using placards. You can decide which placards to use if you know these three things.

- material's hazard class
- amount being shipped
- amount of all hazardous materials of all classes on your vehicle.

Column 3a shows each material's identification number. The identification number must appear on the shipping paper and package. It also must appear on cargo tanks. Police and fire crews use the number to quickly identify the material after an accident.

Column 4 shows the label shippers put on packages of hazardous material. Some products need more than one label. No label is needed where the table shows the word NONE. You can read more about labels later in this section.

The letters A and W in column 1 mean that this product is only regulated if shipped by Air or Water, unless the material is a hazardous substance or hazardous waste. If it is a hazardous substance or hazardous waste it is regulated if it is shipped by truck.

The (+) sets the shipping name and hazard class.

Column 4 shows the label placed on packages. Some hazardous materials require more than one label

(1) +/ A/ W	(2) Hazardous Materials Descriptions and Proper shipping names	(3) Hazard class	(3A) Identification number	(4) Label(s) required
	Carbolic acid, liquid (*liquid tar acid* containing over 50% phenol). See Phenol, liquid			
	Carbon bisulfide, or Carbon disulfide	Flammable liquid	UN1131	Flammable liquid
	Carbon dioxide	Nonflammable gas	UN1013	Nonflammable gas
	Carbon dioxide-nitrous oxide mixture	Nonflammable gas	UN1015	Nonflammable gas
	Carbon dioxide-oxygen mixture	Nonflammable gas	UN1014	Nonflammable gas
	Carbon dioxide, refrigerated liquid	Nonflammable gas	UN2187	Nonflammable gas
AW	Carbon dioxide, solid, *or* Dry ice, *or* Carbonice	ORM-A	UN1845	None
+	Carbon monoxide	Flammable gas	UN1016	Flammable gas
	Carbon monoxide, cryogenic liquid	Flammable gas	NA9202	Flammable gas
AW	Carbon tetrachloride *Carbonyl chloride. See* Phosgene	ORM-A	UN1846	None

Figure 7-3
Part of the Hazardous Materials Table

The List of Hazardous Substances and Reportable Quantities. The DOT and the EPA want to know about spills of some products. These products are called **hazardous substances**. They are named in the List of Hazardous Substances and Reportable Quantities (see Figure 7-4). Column 3 of the list shows each product's reportable quantity (RQ). The shipper identifies RQs on the shipping paper. The letters RQ may appear before or after the basic item description. You or your employer must report any spill of a **reportable quantity** of these substances.

Starred* entries also occur in the Hazardous Materials Table. Look at the entry for Phosgene in column 1 of Figure 7-4. The star* shows that the Hazardous Materials Table also lists phosgene. Column 2 shows that Carbonyl Chloride is another name for the same product. The RQ for phosgene is 10 pounds. If there are 10 pounds or more in a single package, the shipment contains a reportable quantity. The item description on the shipping paper will include the letters RQ. This tells drivers that their employer must report spills of the shipment to the National Response Center. More information about the reporting rules appears later in this section. Figure 7-5 on the next page shows a correct shipping paper for Phosgene with all the entries required by regulation.

If the words INHALATION HAZARD are on the shipping paper or package, the rules require POISON placards. You must use POISON placards in addition to any others needed by the product's hazard class. Always show the hazard class placard and the POISON placard, even for small amounts.

Test Your Knowledge

1. Shippers package in order to (fill in the blank) the material.
2. Drivers placard their vehicle to (fill in the blank) the risk .
3. What three things do you need to know to decide which placards (if any) you need?
4. A hazardous material's ID number must appear on the (fill in the blank) and on the (fill in the blank). The number must also appear on cargo tanks.
5. Where must you keep shipping papers describing hazardous materials?

These questions may be on your test. If you can't answer all, reread pages 7-1 through 7-6.

Figure 7-4
Part of the List of Hazardous Substances and Reportable Quantities

The name Phosgene is starrred (*) because the name also appears in the hazardous materials table

Spills of 10 pounds or more must be reported

LIST OF HAZARDOUS SUBSTANCES AND REPORTABLE QUANTITIES - Continued

Hazardous Substance	Synonyms	Reportable Quantity (RQ) Pounds (Kilograms)*
Phenyl mercaptan @	Benzinethiol	100 (45.4)
	Thiophenol *	
Phenylmercuric acetate	Mercury, (acetato-0)phenyl	100 (45.4)
N-Phenylthiourea	Thiourea, phenyl	100 (45.4)
Phorate	Phosphorodithioic acid, 0,0-diethyl S-(ethylthio), methylester	10 (4.54)
Phosgene *	Carbonyl chloride	10 (4.54)
Phosphine *	Hydrogen phosphide	100 (45.4)
Phosphoric acid *		5000 (2270)
Phosphoric acid, diethyl p-nitrophenyl ester	Diethyl-p-nitrophenyl phosphate	100 (45.4)
Phosphoric acid, lead salt	Lead phosphate	1 (0.454)

The shipping paper shown in Figure 7-5 describes a shipment. The shipping paper for a hazardous material must include

- page numbers if the shipping paper has more than one page. The first page must tell the total number of pages. For example, "Page 1 of 4."
- a proper description of the hazardous product.
- a "**shipper's certification**," signed by the shipper, saying he/she prepared the shipment according to the regulations.

The Shipping Paper

If the shipping paper describes both hazardous and non-hazardous products, the hazardous materials will be either

- described first, or
- highlighted in a contrasting color, or
- identified by an "X" placed before the shipping name in a column captioned "HM." The letters "RQ" may be used instead of "X" if the shipment is a reportable quantity.

The Item Description

The basic description of a hazardous product includes the proper shipping name, hazard class, and identification number, in that order.

Shipping name, hazard class, and ID number must not be abbreviated. The description must also show

- the total quantity and unit of measure, and
- the letters RQ if a reportable quantity.

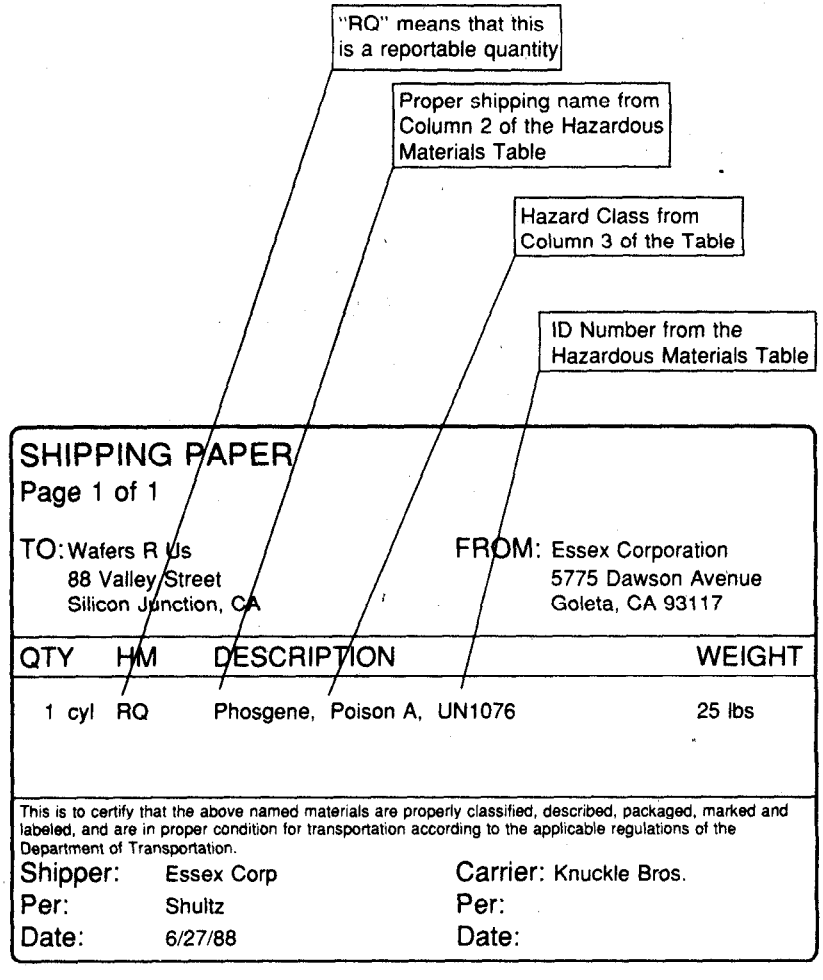

Figure 7-5
Example of a Shipping Paper

Total quantity can appear before or after the basic description. Packaging type and the unit of measurement may be abbreviated. For example:

10 ctns. Paint, Flammable liquid, UN1263, 500 lbs.

The shipper of hazardous waste must put the word WASTE before the name of the material on the shipping paper (hazardous waste manifest). For example:

Waste Acetone, flammable liquid, UN1090.

A non-hazardous material may **not** be described by using a hazard class or an ID number.

Shipper's Certification

When the shipper packages a hazardous material, he certifies that the package has been prepared according to the regulations. The signed shipper's certification appears on the original shipping paper. The only exceptions are when a shipper is a private carrier transporting his or her own product, and when the package is provided by the carrier (for example, a cargo tank). The glossary at the back of this manual shows acceptable shipper certifications. Unless a package is clearly unsafe, you may accept the shipper's certification concerning proper packaging. Some carriers have additional rules about transporting hazardous products. Follow your employer's rules when accepting shipments.

Package Markings and Labels

Shippers print required markings directly on the package, an attached label, or tag. The most important package marking is the name of the hazardous material. It is the same name as the one on the shipping paper. When required, the shipper will put the following on the package:

- the name and address of shipper or consignee,
- the hazardous material's shipping name and identification number,
- the labels required.

If the rules require it, the shipper also will put RQ or INHALATION-HAZARD on the package. Cartons with liquid containers inside may also have "this side up" markings. The labels used always reflect the hazard class of the product. If a package needs more than one label, the labels will be close together, near the proper shipping name.

Recognizing Hazardous Materials

Learn to recognize shipments of hazardous materials. To find out if the shipment includes a hazardous material, look at the shipping paper. Does it have

- an entry with a proper shipping name, hazard class, and ID number?
- a highlighted entry, or one with an X or RQ in the HM column?

Other clues suggest hazardous materials

- What business is the shipper in? Paint dealer? Chemical supply? Scientific supply house? Pest control or agricultural supplier? Explosives, munitions, or fireworks dealer?
- Are there tanks with diamond labels or placards on the premises?
- What type of package is being shipped? Cylinders & drums are often used for hazardous material shipments.
- Does the package bear a hazard class label, proper shipping name, or ID number?
- Are there any handling precautions?

When transporting a hazardous waste, you must sign and carry a Uniform Hazardous Waste Manifest. The name and EPA registration number of the shipper, carriers, and destination must appear on the manifest. The shipper will prepare, date and sign the manifest. Treat the manifest as a shipping paper when transporting the waste. Only give the waste shipment to another registered carrier or treatment facility. Each carrier transporting the shipment must sign the manifest. After you deliver the shipment, keep your copy of the manifest. Each copy must have all needed signatures and dates, including those of the person to whom you delivered the waste.

· ***Hazardous Waste Manifest***

Attach the right placards as you load the vehicle and before you drive it. You may move an improperly placarded vehicle only in an emergency to protect life or property.

· ***Placarding***

Placards must appear on both sides and ends of the vehicle. Each placard must be

- easily seen from the direction it faces
- placed so the words or numbers are level and read from left to right
- at least 3 inches away from any other markings.

First check that the shipper is using the correct hazard class for the shipping paper and package label. If you are not familiar with the material, ask the shipper or contact your office. To decide which placards to use, you need to know

- the shipment's hazard class,
- the amount shipped,
- and the total weight of all hazardous materials in your vehicle.

There are two placard tables. Always use placards to transport **any** amount of material in Table 1.

PLACARD TABLE 1

IF YOUR VEHICLE CONTAINS ANY AMOUNT OF...	PLACARD AS...
Class A explosives	EXPLOSIVE A
Class B explosives (not required if placarded Explosive A)	EXPLOSIVE B
Poison A	POISON GAS
Flammable solid- (when labeled dangerous when wet)	FLAMMABLE SOLID W.
Radioactive material (YELLOW III label only)	RADIOACTIVE

· ***Placard Table 1 -- Any Amount***

The hazard classes in Table 2 need placards only if the amount transported is 1000 lbs or more including the package. Add the amounts from all shipping papers for all the Table 2 products you have on board. You may use DANGEROUS placards instead of separate placards for each Table 2 hazard class when

- you have two or more Table 2 hazard classes, requiring different placards that total 1000 lbs or more, and
- you have **not** loaded 5000 lbs or more of any Table 2 hazard class material at any one place. (You must use the specific placard for this material.)
- If the words INHALATION HAZARD are on the shipping paper or package, the rules require POISON placards. You must use POISON placards in addition to any others needed by the product's hazard class. Always show the hazard class placard and the POISON placard, even for small amounts.

BLASTING AGENTS, OXIDIZER, and DANGEROUS placards need not be used if a vehicle contains Class A or Class B explosives and is placarded EXPLOSIVES A or EXPLOSIVES B. A NON-FLAMMABLE GAS placard is not needed on a vehicle displaying a FLAMMABLE GAS or an OXYGEN placard.

PLACARD TABLE 2

IF YOUR VEHICLE CONTAINS 1000 LBS OR MORE...	PLACARD AS...
Class C explosives (with EXPLOSIVE C label)	DANGEROUS
Blasting Agents	BLASTING AGENTS
Nonflammable gas	NONFLAMMABLE GAS
Nonflammable gas (Flourine)	POISON
Nonflammable gas (cryogenic liquid oxygen)	OXYGEN
Flammable Gas	FLAMMABLE GAS
Flammable liquid	FLAMMABLE
Flammable solid	FLAMMABLE SOLID
Oxidizer	OXIDIZER
Organic Peroxide	ORGANIC PEROXIDE
Poison B	POISON
Corrosive material	CORROSIVE
Irritating material	DANGEROUS
Chlorine in container with capacity of 110 gal. or more	CHLORINE
Combustible liquid in container with capacity of 110 gal. or more	COMBUSTIBLE

Placard Table 2 -- 1000 lbs. or more

Test Your Knowledge

1. What is a shipper's certification? Where does it appear? Who signs it?
2. When may non-hazardous material be described by hazard class words or ID number?
3. Name five hazard classes that require placarding in **any** amount.
4. A shipment described on the a Hazardous Waste Manifest may only be delived to another (fill in the blank) carrier or treatment facility, which then signs the (fill in the blank), giving you a copy which you must keep.
5. Your load includes 20 lbs of poison A and 1000 lbs flammable gas. What placards do you need, if any?

These questions may be on your test. If you can't answer all, reread pages 7-7 through 7-10.

7.4 Loading & Unloading

- ***General Loading Requirements***

- Do all you can to protect containers of hazardous materials. Don't use any tools which might damage containers or other packaging during loading . Don't use hooks.
- Before loading or unloading, set the parking brake. Make sure the vehicle will not move.
- Many products are more hazardous in the heat. Load hazardous materials away from heat sources.
- Watch for signs of leaking or damaged containers: LEAKS SPELL TROUBLE! Do not transport leaking packages. Depending on the material, you, your truck, and others could be in danger.

No Smoking. When loading hazardous materials, keep fire away. Don't let people smoke nearby. Never smoke around

EXPLOSIVES OXIDIZERS FLAMMABLES

Secure Against Movement. Make sure containers don't move around in transit. Brace them so they will not fall, slide, or bounce around. Be very careful when loading containers that have valves or other fittings.

Do not open any package between the points of origin and destination. Never transfer hazardous products from one package to another. You may empty a cargo tank, but do not empty any other package while it is on the vehicle.

Cargo Heater Rules. There are special cargo heater rules for loading:

EXPLOSIVES FLAMMABLE LIQUID FLAMMABLE GAS

The rules usually forbid use of cargo heaters, including automatic cargo heater / air conditioner units. Unless you have read all the related rules, don't load the above products in a cargo space that has a heater.

Use closed cargo space. You cannot have overhang or tailgate loads of

EXPLOSIVES FLAMMABLE SOLIDS OXIDIZING MATERIALS

You must load these hazards into a closed cargo space unless all packages are

- fire and water resistant, or
- covered with a fire and water resistant tarp.

- ***Precautions for Specific Hazards***

Explosives. Before loading or unloading any explosive, turn your engine off. Then check the cargo space.

- You must disable cargo heaters. Disconnect heater power sources and drain heater fuel tanks.
- There must be no sharp points that might damage cargo. Look for bolts, screws, nails, broken side panels, and broken floor boards.
- Use a floor lining with Class A or B explosives. The floors must be tight and the liner must not contain steel or iron.

Use extra care to protect explosives. Never use hooks or other metal tools. Never drop, throw, or roll the shipment. Protect explosive packages from other cargo that might cause damage.

Do not transfer a Class A or B explosive from one vehicle to another on a public roadway except in emergency. If safety requires an emergency transfer, set out red warning reflectors, flags, or electric lanterns. You must warn other highway users.

Never transport damaged packages of explosives. Do not take a package that shows any dampness or oily stain.

Do not transport EXPLOSIVES A in triples. Do not transport EXPLOSIVES A in vehicle combinations if

- there is a placarded cargo tank in the combination, or
- the other vehicle in the combination contains:
  - initiating explosives
  - radioactive materials labeled "Yellow III,"
  - class A or B poisons
  - hazardous materials in a portable tank, Spec 106A or 110A tank.

Corrosive Liquids. If loading by hand, load breakable containers of corrosive liquid one by one. Keep them right side up. Do not drop or roll the containers. Load them onto an even floor surface. Only stack carboys if the lower tiers can bear the weight of the upper tiers safely.

Do not load nitric acid above any other product, or stack more than two high.

Load charged storage batteries so their liquid won't spill. Keep them right side up. Make sure other cargo won't fall against or short circuit them.

Never load corrosive liquids next to or above

- EXPLOSIVES A
- EXPLOSIVES B
- FLAMMABLE SOLID
- OXIDIZING MATERIAL

Compressed Gases, Including Cryogenic Liquids. If your vehicle doesn't have racks to hold cylinders, the cargo space floor must be flat. The cylinders must be

- held upright or braced laying down flat, or
- in racks attached to the vehicle, or
- in boxes that will keep them from turning over.

Poisons. Never transport Poison A or irritating materials in containers with interconnections. Never load a package labeled POISON, POISON GAS, or IRRITANT, in the driver's cab or sleeper or with food material for human or animal consumption.

Radioactive Materials. Some packages of radioactive materials bear a number called the "transport index." The shipper labels these packages Radioactive II or Radioactive III, and prints the package's transport index on the label. Radiation surrounds each package, passing through all nearby packages. To deal with this problem, the number of packages you can load together is controlled. Their closeness to people, animals, and unexposed film is also controlled. The transport index tells the degree of control needed during transportation. The total transport index of all packages in a single vehicle must not exceed 50.

Appendix A has rules for each transport index. It shows how long and how close you can load radioactive products to people, animals, or film. For example, you can't leave a package with a transport index of 1.1 within 2 feet of people or cargo space walls.

Mixed loads. The rules require some products to be loaded separately. Do not load them together in the same cargo space. Figure 7-6 lists some examples. **The regulations (the Segregation and Separation Chart) name other materials you must keep apart.**

DO **NOT** LOAD...	IN THE SAME VEHICLE WITH...
POISON labeled material	animal or human food unless the poison package is overpacked in an approved way. Foodstuff is anything you swallow. However, mouthwash, toothpaste, and skin creams are not foodstuff.
Poison A	Oxidizers, Flammables, Corrosives, Organic Peroxides.
Charged storage batteries	Class A Explosives
Detonating primers	any other explosives unless in authorized containers or packagings.
Cyanides or cyanide mixtures	acids, corrosive materials, or other acidic materials which could release hydrocyanic acid from cyanides. Cyanides are materials with the letters CYAN as part of their shipping name. For example: Acetone **Cyan**ohydrin Silver **Cyan**ide Trichloroiso**cyan**uric acid, dry
Nitric acid	Other corrosive liquids in carboys, unless separated from them in an approved way.

Figure 7-6
Prohibited Loading Combinations

Test Your Knowledge

1. Around which three hazard classes must you never smoke?
2. Which three hazard classes should not be loaded into a trailer that has a heater / air conditioner unit?
3. Should the floor liner required for Explosives A be stainless steel?
4. At the shipper's dock you're given a shipping paper for 100 cartons of battery acid. You already have 100 lbs of dry Trichloroiso**cyan**uric acid on board. What precautions do you take?
5. Name a hazard class that uses a transport index. What is the maximum transport index that can be loaded in a single vehicle?

These questions may be on your test. If you can't answer all, reread Section 7.4.

7.5 Bulk Tank Marking, Loading & Unloading

The glossary gives the special meaning of the word bulk. **Cargo tanks** are bulk containers permanently attached to a vehicle. Cargo tanks remain on the vehicle when you load and unload them. **Portable tanks** are bulk containers which are not permanently attached to a vehicle. They are loaded or unloaded with the product while off the vehicle. Portable tanks are then put on a vehicle for transportation. There are many types of cargo tanks in use. The most common are MC306 for liquids and MC331 for gases.

- ***Tank Markings***

You must display the ID number of the contents of portable tanks and cargo tanks. Product ID numbers are in column 3a of the Hazardous Materials Table. The rules require black 4 inch numbers on orange panels, DOT placards, or a white, diamond shaped background if no placards are required. Specification cargo tanks must show retest date markings.

Portable tanks must also show the lessee or owner's name. They must also show the shipping name and ID number of the contents on two opposing sides. The letters must be at least 2 inches tall. The ID number must appear on each side **and** each end of tanks that hold 1000 gallons or more. The ID numbers must still show when the portable tank is on the vehicle. If they don't, you must display the ID number on both sides and ends of the vehicle.

- ***Tank Loading***

The person in charge of loading and unloading a cargo tank must be sure someone is always watching. The person watching the loading or unloading must

- have a clear view of the cargo tank,
- be within 25 feet of the tank,
- be aware of the hazards,
- know the procedures to follow in an emergency, and
- be authorized to move the cargo tank and able to do so.

Close all manholes and valves before moving a tank of hazardous materials. It does not matter how small the amount in the tank or how short the distance. Manholes and valves must not leak.

- ***Flammable Liquids***

Turn off your engine before loading or unloading any flammable liquid. Only run the engine if needed to operate a pump. Ground a cargo tank correctly before filling it through an open filling hole. Ground the tank before opening the filling hole, and maintain the ground until after closing the filling hole.

- ***Compressed Gas***

Keep liquid discharge valves on a compressed gas tank closed except when loading and unloading. Unless your engine runs a pump for product transfer, turn it off when loading or unloading. If you use the engine, turn it off after product transfer, before unhooking the hose. Unhook all loading / unloading connections before coupling, uncoupling, or moving a chlorine cargo tank. Always chock trailers and semi-trailers to prevent motion when uncoupled from the power unit.

1. What are cargo tanks?
2. How is a portable tank different from a cargo tank?
3. Your engine runs a pump used during delivery of compressed gas. Should you turn off the engine **before** or **after** unhooking hoses after delivery?

These questions may be on your test. If you can't answer all, reread section 7.5.

7.6 Hazardous Materials: Driving & Parking Rules

• Parking with Explosives A

Never park with EXPLOSIVES A or EXPLOSIVES B within 5 feet of the travelled part of the road. Unless your work requires it, do not park within 300 feet of

- a bridge, tunnel, or building,
- a place where people gather, or
- an open fire.

If you must park to do your job, do so only briefly.

Don't park on private property unless the owner is aware of the danger. Someone must always watch the parked vehicle. You may let someone else watch it for you only if your vehicle is

- on the shipper's property, or
- on the carrier's property, or
- on the consignee's property.

You can leave your vehicle unattended in a safe haven. A safe haven is a government approved place for parking unattended vehicles loaded with explosives.

• Parking When Placarded but Not Transporting Explosives A or B

You may park a placarded vehicle (not carrying explosives) within 5 feet of the travelled part of the road only if your work requires it. Do so only briefly. Someone must always watch the vehicle when parked on a public roadway or shoulder. Do not uncouple a trailer and leave it with hazardous material on a public street. Do not park within 300 feet of an open fire.

• Watching Parked Vehicles

The person watching a placarded vehicle must

- be in the vehicle, awake, and not in the sleeper berth, or within 100 feet of the vehicle and have it within clear view,
- be aware of the hazards,
- know what to do in emergencies, and
- be able to move the vehicle if needed.

• No Flares!

You might break down and have to use stopped vehicle signals. Use reflective triangles or red electric lights. Never use burning signals, such as flares or fusees, around a

- tank used for flammable liquid or flammable gas (whether loaded or empty),
- vehicle loaded with

EXPLOSIVES A	FLAMMABLE LIQUID
EXPLOSIVES B	FLAMMABLE GAS

• Route Restrictions

Some states and counties require permits to transport hazardous material or waste. They may limit the routes you can use. Local rules about routes and permits change often. It is your job as driver to find out if you need permits or must use special routes. Make sure you have all needed papers before starting.

If you work for a carrier, ask your dispatcher about route limits or permits. If you are an independent and are planning a new route, check with state agencies where you plan to travel. Some localities prohibit transportation of hazardous materials through tunnels, over bridges, or other roadways. Check before you start.

Whenever placarded, avoid heavily populated areas, crowds, tunnels, narrow streets, and alleys. Take other routes, even if inconvenient, unless there is no other way. Never drive a placarded vehicle near open fires unless you can safely pass without stopping.

If transporting Class A or Class B Explosives, you must have a written route plan and follow that plan. Carriers prepare the route plan in advance, and give the driver a copy. You may plan the route yourself if you pick up the explosives at a location other than your employer's terminal. Write out the plan in advance. Keep a copy of it with you while transporting the explosives. Deliver shipments of explosives only to authorized persons or leave them in locked rooms designed for explosives storage.

A carrier must choose the safest route to transport placarded radioactive material. After choosing the route, the carrier must tell the driver about the radioactive materials, and show the route to be taken.

- ***No Smoking***

Do not smoke within 25 feet of a placarded tank used for flammable liquids or gases. Also do not smoke or carry a lighted cigarette, cigar, or pipe within 25 feet of any vehicle which contains

EXPLOSIVES OXIDIZERS FLAMMABLES

- ***Refuel With Engine Off***

Turn off your engine before fueling a placarded vehicle. Someone must always be at the nozzle, controlling fuel flow.

- ***10 B:C Fire Extinguisher***

The power unit of placarded vehicles must have a fire extinguisher with a UL rating of 10 B:C or more.

- ***Check Tires Every 2 hours / 100 miles***

Make sure your tires are properly inflated. Check placarded vehicles with dual tires at the start of each trip and when you park. You must stop and check the tires every 2 hours or 100 miles, whichever is less. The only acceptable way to check tire pressure is to use a tire pressure gauge.

Do not drive with a tire that is leaking or flat except to the nearest safe place to fix it. Remove any overheated tire. Place it a safe distance from your vehicle. Don't drive until you correct the cause of the overheating. Remember to follow the rules about parking and watching placarded vehicles. They apply even when checking, repairing, or replacing tires.

- ***Where to Keep Shipping Papers***

Do not take a hazardous material shipment without a properly prepared shipping paper. A shipping paper for hazardous material must always be easily recognized. Other people must be able to find it quickly after an accident.

- Clearly distinguish hazardous material shipping papers from others by tabbing them or keeping them on top of the stack of papers.
- When you are behind the wheel, keep shipping papers within your reach (with your seat belt on), or in a pouch on the driver's door. They must be easily seen by someone entering the cab.
- When not behind the wheel, leave shipping papers in the driver's door pouch or on the driver's seat.

A carrier must give each driver transporting Class A or Class B explosives a copy of FMCSR part 397. The carrier must also give written instructions on what to do if delayed or in an accident. The written instructions must include

- the names and telephone numbers of people to contact (including carrier agents or shippers),
- the nature of the explosives transported,
- the precautions to take in emergencies such as fires, accidents, or leaks.

Papers for Class A or B Explosives

You must be familiar with, and have in your possession while driving, the

- shipping papers,
- written emergency instructions,
- written route plan,
- a copy of FMCSR part 397.

A driver transporting chlorine in cargo tanks must have an approved gas mask in the vehicle. The driver must also have an emergency kit for controlling leaks in dome cover plate fittings on the cargo tank.

Equipment for Chlorine

Stop before crossing a railroad if your vehicle:

- is placarded, or
- carries any amount of chlorine, or
- has cargo tanks, whether loaded or empty, used for hazardous materials.

You must stop 15 to 50 feet before the nearest rail. Proceed only when you are sure no train is coming. Don't shift gears while crossing the tracks.

Stop Before Railroad Crossings

7.7 Hazardous Materials – Emergencies

No Smoking
Warn Others
Keep People Away
Avoid Contact or Inhaling

The Department of Transportation has a guidebook for fire fighters, police, and industry personnel. The guidebook tells them what to do first to protect themselves and the public from hazardous materials. The guide is indexed by shipping name and hazardous material ID number. Emergency personnel look for these things on the shipping paper. That is why it is vital that the shipping name, ID number, label, and placards are correct.

Emergency Response Guidebook

As a professional driver, your job at the scene of an accident is to

- Keep people away from the area.
- Limit the spread of material, **only if you can safely do so.**
- Communicate the danger to emergency response personnel.

Accidents / Incidents

Follow this checklist.

1. Check to see that your driving partner is OK.
2. Keep shipping papers with you.
3. Keep people far away & upwind.
4. Warn others of the danger.
5. Send for help.
6. Follow your employer's instructions.

- ***Fires***

You might have to control minor truck fires on the road. **However, unless you have the training and equipment to do so safely, don't fight hazardous material fires.** Dealing with hazardous material fires requires special training and protective gear.

When you discover a fire, send someone for help. You may use the fire extinguisher to keep minor truck fires from spreading to cargo before fire fighters arrive. Feel trailer doors to see if they are hot before opening them. If hot, you may have a cargo fire and should not open the doors. Opening doors lets air in and may make the fire flare up. Without air, many fires only smolder until firemen arrive, doing less damage. If your cargo is already on fire, it is not safe to fight the fire. Keep the shipping papers with you to give to emergency personnel as soon as they arrive. **Warn other people of the danger and keep them away.**

- ***Leaks***

If you discover a cargo leak, identify the material by using shipping papers, labels, or package location. **Do not touch any leaking material.** Many people, under the stress of handling an accident or leak, forget and injure themselves this way. Do not try to identify material or find the source of a leak by smell. Many toxic gases destroy one's sense of smell. They can injure or kill you even if they don't smell. Do not eat, drink, or smoke around a leak or spill.

If hazardous material is spilling from your vehicle, do not move it any more than safety requires. You may move off the road and away from places where people gather, if doing so serves safety. Only move your vehicle if you can do so without danger to yourself or others.

Never continue driving with hazardous material leaking from your vehicle to find a phone booth, truck stop, help, or similar reason. Remember that the carrier pays for the cleanup of contaminated parking lots, roadways, and drainage ditches. The costs are enormous, so don't leave a lengthy trail of contamination. If hazardous material is spilling from your vehicle,

- Park it.
- Secure the area.
- Stay there.
- Send someone else for help.

When sending someone for help, give that person:

- a description of the emergency,
- your exact location and direction of travel,
- your name, the carrier's name, and the name of the community or city where your terminal is located
- the shipping name, hazard class, and ID number of the material, if you know them.

This is a lot for someone to remember. It is a good idea to write it all down for the person you send for help. The emergency response team must know these things to find you and to handle the emergency. They may have to travel miles to get to you. This information will help them to bring the right equipment the first time, without having to go back for it.

Never move your vehicle if doing so will cause contamination or damage the vehicle. Keep downwind and away from roadside rests, truckstops, cafes, businesses. Never try to repack leaking containers. Unless you have the training and equipment to repair leaks safely, don't try it. Call your dispatcher or supervisor for instructions, and, if needed, emergency personnel.

Response to Specific Hazards

Explosives. If your vehicle breaks down or is in an accident while carrying explosives, warn others of the danger. Keep bystanders away. Do not allow smoking or open fire near the vehicle.

Remove all explosives before pulling apart vehicles involved in a collision. Place the explosives at least 200 feet from the vehicles and occupied buildings. If there is a fire, warn everyone of the danger of explosion. Stay a safe distance away.

Flammable liquids. If you are transporting a flammable liquid and have an accident or your vehicle breaks down, prevent bystanders from gathering. Warn people of the danger. Keep them from smoking.

Never transport a leaking cargo tank farther than needed to reach a safe place. If safe to do so, get off the roadway. Don't transfer flammable liquid from one vehicle to another on a public roadway except in emergency.

Flammable Solids and Oxidizing Materials. If a flammable solid or oxidizing material spills, warn others of the fire hazard. Do not open smoldering packages of flammable solids. Remove them from the vehicle if you can safely do so. Gather and remove any broken packages if safe to do so. Also remove unbroken packages if it will decrease the fire hazard.

Corrosive Materials. If corrosives spill or leak in transit, be careful to avoid further damage or injury when handling the containers. Parts of the vehicle exposed to a corrosive liquid must be thoroughly washed with water. Wash out the interior as soon after unloading as possible, before reloading the vehicle.

If further transportation of a leaking tank would be unsafe, get off the road. If safe to do so, try to contain any liquid leaking from the vehicle. Keep spectators away from the liquid and its fumes. Do everything possible to prevent injury to other highway users.

Compressed Gases. If compressed gas is leaking from your vehicle, warn others of the danger. Only permit those involved in removing the hazard or wreckage to get close. You must notify the shipper of the compressed gas of any accident.

Unless you are fueling machinery used in road construction or maintenance, do not transfer a flammable compressed gas from one tank to another on any public roadway.

Poisons. You must protect yourself, other people, and property from harm. Remember that many products classed as poison are also flammable. If you think a leaking poison liquid or gas might be flammable, take the added precautions needed for flammable liquids or gases. Do not allow smoking, open flame, or welding. Warn others of the hazards of fire, of inhaling vapors, or coming in contact with the poison.

A vehicle involved in a leak of Poison A or Poison B must be checked for stray poison before being used again.

Radioactive Materials. If a leak or broken package involves radioactive material, tell your dispatcher or supervisor as soon as possible. If there is a spill, or if an internal container might be damaged, do not touch or inhale the material. Do not use the vehicle until it is cleaned and checked with a survey meter.

- ***Required Notifications***

The National Response Center helps coordinate emergency response to chemical hazards. They are a resource to the local police and fire fighters. The person in charge of a vehicle involved in an accident may have to phone the National Response Center. This call will be in addition to any made to police or fire fighters. You or your employer must phone when **any** of the following occur **as a direct result of a hazardous materials incident**.

- a person is killed,
- a person receives injuries requiring hospitalization,
- estimated carrier or other property damage exceeds $50,000.

National Response Center
(800) 424 - 8802

The person making the immediate telephone report should be ready to give:

- Their name;
- Name and address of the carrier they work for;
- Phone number where they can be reached;
- Date, time, and location of incident;
- The extent of injuries, if any;
- Classification, name, and quantity of hazardous materials involved, if such information is available;
- Type of incident and nature of hazardous material involvement and whether a continuing danger to life exists at the scene.
- If a reportable quantity of hazardous substance was involved, the caller should give:
  -The name of the shipper,
  -The quantity of the hazardous substance discharged.

Be prepared to give your employer the required information. Carriers must make detailed written reports within 15 days.

The Chemical Transportation Emergency Center (CHEMTREC) in Washington also has a 24 hr. toll free line. CHEMTREC was created to provide emergency personnel with technical information about the physical properties of hazardous products. The National Response Center and CHEMTREC are in close communication. If you call either one, they will tell the other about the problem when appropriate.

CHEMTREC
(800) 424 - 9300

Test Your Knowledge
1. If your placarded trailer has dual tires, how often should you check the tires? 2. What is a safe haven? 3. How close to the travelled part of the roadway can you park with Explosives B? 4. How close can you park to a bridge, tunnel, or building with the same load? 5. What type of fire extinguisher must placarded vehicles carry? 6. You're hauling 100 lbs of **flammable solid - dangerous when wet** material. Do you need to stop before railroad crossings? 7. At a rest area you discover your hazardous material shipment slowly leaking from the vehicle. There's no phone around. What should you do? 8. What is the Emergency Response Guidebook?
These questions may be on your test. If you can't answer all, reread Sections 7.6 and 7.7.

Appendix A
Radioactive Separation Table

(Note: You will not be tested on the numbers in this table.)

Do not leave radioactive yellow - II or yellow - III labeled packages near people, animals, or film longer than shown in this table.

	minimum distance in feet					
	to nearest undeveloped film					to people or cargo
total transport index	0 - 2 hours	2 - 4 hours	4 - 8 hours	8 - 12 hours	over 12 hours	compartment partitions
None	0	0	0	0	0	0
0.1 to 1.0	1	2	3	4	5	1
1.1 to 5.0	3	4	6	8	11	2
5.1 to 10.0	4	6	9	11	15	3
10.1 to 20.0	5	8	12	16	22	4
20.1 to 30.0	7	10	15	20	29	5
30.1 to 40.0	8	11	17	22	33	6
40.1 to 50.0	9	12	19	24	36	7

Appendix B: Table of Hazard Class Definitions

(Note: You will not be tested on this Table.)

HAZARD CLASS	DEFINITION	EXAMPLES
Flammable liquid	Any liquid having a flash point below 100°F as determined by tests listed in 173.115(d). Exceptions are listed in 173.115(a).	Ethyl alcohol, gasoline, acetone, benzene, dimethyl sulfide
Combustible liquid	Any liquid having a flash point at or above 100° and below 200°F as determined by tests listed in 173.115(d). Exceptions are listed in 173.115(b).	Kerosine, fuel oil
Flammable solid	Any solid material, other than an explosive, liable to cause fires through friction or retained heat from manufacturing or processing, or which can be ignited readily creating a serious transportation hazard because it burns vigorously and persistently.	Nitrocellulose (film), phosphorus, charcoal

HAZARD CLASS	DEFINITION	EXAMPLES
Oxidizer	A substance such as chlorate, permanganate, inorganic peroxide, or a nitrate, that yields oxygen readily to stimulate the combustion of organic matter.	Potassium bromate, hydrogen peroxide solution, chromic acid, some bleaches
Organic peroxide	An organic compound containing the bivalent -O-O- structure and which may be considered a derivative of hydrogen peroxide where one or more of the hydrogen atoms have been replaced by organic radicals. Exceptions are listed in 173.151a.	Urea peroxide, benzoyl peroxide
Corrosive Material	Liquid or solid that causes visible destruction or irreversible alterations in human skin tissue at the site of contact. Liquids that severely corrode steel are included.	Bromine, soda lime, hydrochloric acid, sodium hydroxide solution, battery acid
Flammable gas	A compressed gas, as defined in 173.300(a), that meets certain flammability requirements.	Butane, engine starting fluid, hydrogen, liquefied petroleum gas
Nonflammable gas	A compressed gas other than a flammable gas.	Chlorine, anhydrous ammonia, oxygen
Irritating material	A liquid or solid substance which on contact with fire or when exposed to air gives off dangerous or intensely irritating fumes. Poison A materials excluded.	Tear gas, monochloroacetone, diphenylchlorarsine
Poison A	Extremely dangerous poison gases or liquids belong to this class. Very small amounts of these gases or vapors of these liquids, mixed with air, are dangerous to life.	Hydrocyanic acid, bromoacetone, nitric oxide, phosgene, Nitrogen tetroxide, Ethyldichlorarsine
Poison B	Substances, liquids, or solids (including pastes and semi-solids), other than Poison A or irritating materials, that are known to be toxic to humans. These materials cause serious sickness or death within 48 hours following skin contact, inhalation, or ingestion by mouth. In the absence of adequate data on human toxicity, materials are presumed to be toxic to humans if they are toxic to laboratory animals exposed under specified conditions.	Phenol, nitroaniline, parathion, cyanide, mercury based pesticides, disinfectants
Etiologic agents	A viable micro-organism, or its toxin, which causes or may cause human disease.	Vibrio cholerae, clostridium botulinum, polio virus, salmonella, all serotypes
Radioactive material	A material that spontaneously emits ionizing radiation having a specific activity greater than 0.002 microcuries per gram. Further classifications are made within this category according to levels of radioactivity.	Thorium nitrate, uranium hexaflouride
	Explosives are chemical compounds, mixtures, or devices, the primary or common purpose of which is to function by explosion, unless such compound, mixture, or device is otherwise classified. Explosives are divided into three subclasses:	
Explosives A	Detonate with a shock wave greater than the speed of sound and are of maximum hazard.	Dynamite, Nitroglycerin
Explosives B	Generally function by rapid combustion rather than detonation and are a flammable hazard.	Torpedo, propellant explosive
Explosives C	Manufactured articles, such as small arm ammunition, that contain restricted quantities of Class A and/or Class B explosives, and certain types of fireworks. Class C explosives are of minimum hazard.	Toy caps, trick matches, signal flare, some fireworks
Blasting agent	A material designed for blasting, but so insensitive that there is very little probability of ignition during transport.	Ammonium nitrate - fuel oil mixture
	ORM (Other Regulated Materials) is any regulated material that does not meet the definition of the other hazard classes. ORM are divided into five subcategories:	
ORM-A	A material which has an anesthetic, irritating, noxious, toxic, or similar property and can cause extreme annoyance or discomfort to passengers and crew in the event of leakage during transportation.	Trichloroethylene, carbon tetrachloride, ethylene dibromide, chloroform
ORM-B	A material capable of causing significant damage to a transport vehicle or vessel if leaked. This class includes materials that may be corrosive to aluminum.	Calcium oxide, ferric chloride, potassium flouride
ORM-C	A material which has other inherent characteristics not described as an ORM-A or ORM-B, but which make it unsuitable for shipment unless properly identified and prepared for transportation. Each ORM-C material is specifically named in the Hazardous Materials Table.	Castor beans, cotton, asbestos

HAZARD CLASS	DEFINITION	EXAMPLES
ORM-D	A material such as a consumer commodity which, although otherwise subject to regulation, presents a limited hazard during transportation due to its form, quantity, and packaging.	Consumer commodity not otherwise specified, such as nail polish, small arms ammunition, hair spray
ORM-E	A material that is not included in any other hazard class, but is subject to regulation. Materials in this class include hazardous wastes and hazardous substances named in the List of Hazardous Substances and Reportable Quantities but not in the Hazardous Materials Table.	Phenacetin, Saccharin, Aldicarb, reserpine, heptachlor

Hazardous Materials Glossary

(Note: You will not be tested on the glossary.)

Bulk packaging - a packaging, including a transport vehicle or freight container, with a capacity greater than:
- 118.9 gallons for a liquid, or
- 881.8 pounds for a solid, or
- water capacity greater than 1000 lbs for a gas.

Carboy -a bottle or rectangular container that holds from 5 to 15 gallons of liquid. Carboys are made of glass, plastic, or metal and are often cushioned in a wooden box.

Cargo tank -any bulk liquid or compressed gas packaging, whether or not permanently attached to any motor vehicle, which by reason of its size, construction, or attachment to a motor vehicle, is loaded or unloaded without being removed from the motor vehicle. Any packaging fabricated under specifications for cylinders is not a cargo tank.

Carrier -a person engaged in the transportation of passengers or property by land or water (as a common, contract, or private carrier) or by civil aircraft.

Compressed Gas -any material kept in a container with a pressure exceeding 40 p.s.i at 70° F, or 104 p.s.i. at 130° F.

Consignee - the business or person to whom a shipment is delivered.

Cryogenic liquid - a refrigerated liquefied gas having a boiling point colder than -130°F.

Cylinder -a pressure vessel designed for pressures higher than 40 psi.

EPA -the U. S. Environmental Protection Agency

Etiologic agents -a living micro-organism, or its toxin, which causes or may cause human disease.

FMCSR -The Federal Motor Carrier Safety Regulations.

Freight container -a reusable container designed and constructed to permit being lifted with its contents intact and intended primarily for containment of packages (in unit form) during transportation.

Gross weight -the weight of the packaging plus the weight of its contents.

Hazardous material -any material that poses an unreasonable risk to health, safety and property during transportation. These materials are named by DOT in the Hazardous Materials Table.

Limited quantity -the maximum amount with specific placarding, labeling, and packaging exceptions, except for Poison B materials.

Marking -applying the descriptive name, instructions, cautions, weight, or specification marks required to be placed on outside containers of hazardous materials.

Mixture -a material containing more than one chemical compound or element.

Name of contents -the proper shipping name as specified in the Hazardous Materials Table or the Optional Table.

N.O.S. -not otherwise specified

Outage -the amount by which a packaging falls short of being full of liquid, usually expressed in percent by volume. The amount of outage required for liquids in cargo tanks depends on how much the material will expand with temperature change during transit. Different materials expand at different rates. Enough outage must be allowed so that the tank will still not be full at 130°F.

Overpack -an enclosure used by a single shipper to provide protection or easy use in handling of a package or to combine two or more packages. "Overpack" does not include a freight container.

Portable tank -any package (except a cylinder having a 1000 lb or less water capacity) with capacity greater than 110 U.S. gallons designed primarily to be loaded in, on, or temporarily attached to, a transport vehicle. A portable tank is equipped with skids, mounting, or accessories to facilitate handling of the tank by mechanical means.

Proper shipping name -the name of the hazardous material shown in Roman print (not italics) in the Hazardous Materials Table.

P.s.i. -pounds per square inch.

P.s.i.a. -pounds per square inch absolute.

Reportable quantity (RQ) -the quantity (per single package) which equals or exceeds the quantity specified in column 3 of the List of Hazardous Substances and Reportable Quantities. Reportable quantities are treated as hazardous materials and have reporting requirements.

Shipper's certification - a statement on a shipping paper, signed by the shipper, saying he/she prepared the shipment properly according to law.

"This is to certify that the above named materials are properly classified, described, packaged, marked and labeled, and are in proper condition for transportation according to the applicable regulations of the Department of Transportation."

or

"I hereby declare that the contents of this consignment are fully and accurately described above by proper shipping name and are classified, packed, marked and labeled, and are in all respects in proper condition for transport by * according to applicable international and national governmental regulations."

* words may be inserted here to indicate mode of transportation (rail, aircraft, motor vehicle, vessel)

Shipping paper -a shipping order, bill of lading, manifest or other shipping document serving a similar purpose and containing the information required by the regulations.

Technical name -a recognized chemical name currently used in scientific and technical handbooks.

Transport Vehicle -a cargo carrying vehicle such as an automobile, van, tractor, truck, semitrailer, tank car or rail car used for the transportation of cargo by any mode. Each cargo carrying body (trailer, rail car, etc.) is a separate transport vehicle.

Water reactive material (solid) -any solid material (including sludges and pastes) which when mixed with water, is likely to ignite or give off flammable or toxic gases in dangerous quantities. Water reactive material must have DANGEROUS WHEN WET and FLAMMABLE SOLID labels.

Hazardous Materials Warning Labels

DOMESTIC LABELING

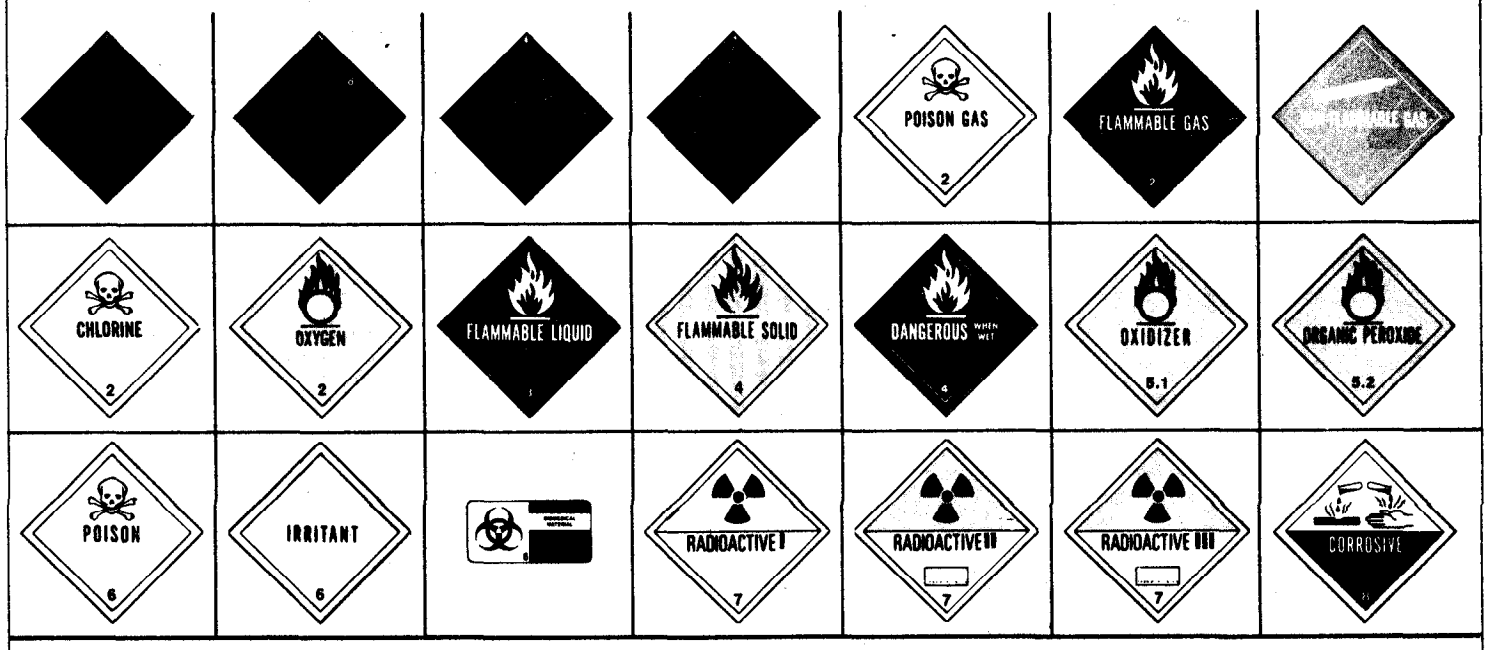

General Guidelines on Use of Labels

(CFR, Title 49, Transportation, Parts 100-177)

- Labels illustrated above are normally for *domestic shipments*. However, some air carriers *may* require the use of International Civil Aviation Organization (ICAO) labels.
- Domestic Warning Labels *may* display UN Class Number, Division Number (and Compatibility Group for Explosives only) [Sec. 172.407(g)].
- Any person who offers a hazardous material for transportation MUST label the package, if required [Sec. 172.400(a)].
- The Hazardous Materials Tables, Sec. 172.101 and 172.102, identify the proper label(s) for the hazardous materials listed.
- Label(s), when required, must be printed on or affixed to the surface of the package near the proper shipping name [Sec. 172.406(a)].
- When two or more different labels are required, display them next to each other [Sec. 172.406(c)].
- Labels may be affixed to packages (even when not required by regulations) provided each label represents a hazard of the material in the package [Sec. 172.401].

Check the Appropriate Regulations
Domestic or International Shipment

Additional Markings and Labels

HANDLING LABELS

Cargo Aircraft Only
172.402(b)

ORM-E

172.316

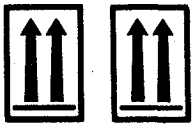

172.312(a)(c)

Package Orientation Markings

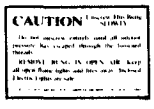

Bung Label
172.402(e)

INNER PACKAGES COMPLY WITH PRESCRIBED SPECIFICATIONS

173.25(a)(4)

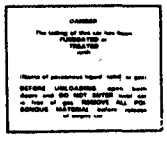

Fumigation
173.9

EMPTY

173.427

Here are a few additional markings and labels pertaining to the transport of hazardous materials. The section number shown with each item refers to the appropriate section in the HMR. The Hazardous Materials Tables, Section 172.101 and 172.102, identify the proper shipping name, hazard class, identification number, required label(s) and packaging sections.

Poisonous Materials

172.505

INHALATION HAZARD

172.301

Materials which meet the inhalation toxicity criteria specified in Section 173.3a(b)(2), have additional "communication standards" prescribed by the HMR. First, the words "Poison-Inhalation Hazard" must be entered on the shipping paper, as required by Section 172.203(k)(4), for any primary capacity units with a capacity greater than one liter. Second, packages of 110 gallons or less capacity must be marked "Inhalation Hazard" in accordance with Section 172.301(a). Lastly, transport vehicles, freight containers and portable tanks subject to the shipping paper requirements contained in Section 172.203(k)(4) must be placarded with POISON placards in addition to the placards required by Section 172.504. For additional information and exceptions to these communication requirements, see the referenced sections in the HMR.

Keep a copy of the DOT Emergency Response Guidebook handy!

Hazardous Materials Warning Placards

DOMESTIC PLACARDING

Illustration numbers in each square refer to Tables 1 and 2 below.

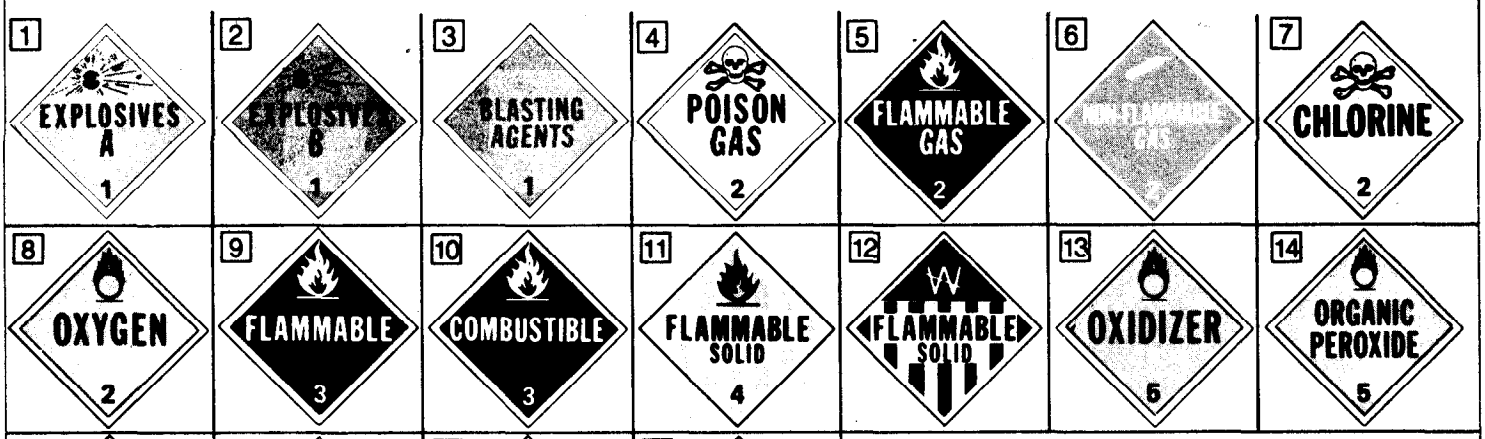

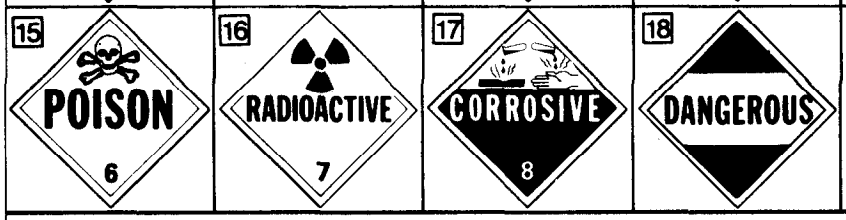

WHITE SQUARE BACKGROUND FOR PLACARD

HIGHWAY

- *Used for* "HIGHWAY ROUTE CONTROLLED QUANTITY OF RADIOACTIVE MATERIALS." (Sec. 172.507)

RAIL

- Used for RAIL SHIPMENTS "EXPLOSIVE A," "POISON GAS" and "POISON GAS RESIDUE" placards. (Sec. 172.510(a))

Guidelines

(CFR, Title 49, Transportation, Parts 100-177)

- Placard any transport vehicle, freight container, or rail car containing any quantity of material listed in Table 1.
- Materials which are shipped in portable tanks, cargo tanks, or tank cars must be placarded when they contain any quantity of Table 1 and/or Table 2 material.
- Motor vehicles or freight containers containing packages which are subject to the "Poison-Inhalation Hazard" shipping paper description of Section 172.203(k)(4), must be placarded POISON in addition to the placards required by Section 172.504 (see Section 172.505).
- When the gross weight of all hazardous material covered in TABLE 2 is less than 1000 pounds, no placard is required on a transport vehicle or freight container.
- Placard freight containers 640 cubic feet or more containing any quantity of hazardous material classes listed in TABLES 1 and/or 2 when offered for transportation by air or water (see Section 172.512(a)). Under 640 cubic feet see Section 172.512(b).

TABLE 1

Hazard Classes	No.
Class A explosives	1
Class B explosives	2
Poison A	4
Flammable solid (DANGEROUS WHEN WET label only)	12
Radioactive material (YELLOW III label)	16
Radioactive material:	
Uranium hexafluoride fissile (Containing more than 1.0% U^{235})	16 & 17
Uranium hexafluoride, low-specific activity (Containing 1.0% or less U^{235})	16 & 17

Note: For details on the use of Tables 1 and 2, see Sec. 172.504 (see footnotes at bottom of tables.)

TABLE 2

Hazard Classes	No.
Class C explosives	18
Blasting agent	3
Nonflammable gas	6
Nonflammable gas (Chlorine)	7
Nonflammable gas (Fluorine)	15
Nonflammable gas (Oxygen, cryogenic liquid)	8
Flammable gas	5
Combustible liquid	10
Flammable liquid	9
Flammable solid	11
Oxidizer	13
Organic peroxide	14
Poison B	15
Corrosive material	17
Irritating material	18

UN or NA Identification Numbers

MUST BE DISPLAYED ON TANK CARS, CARGO TANKS, PORTABLE TANKS AND BULK PACKAGINGS

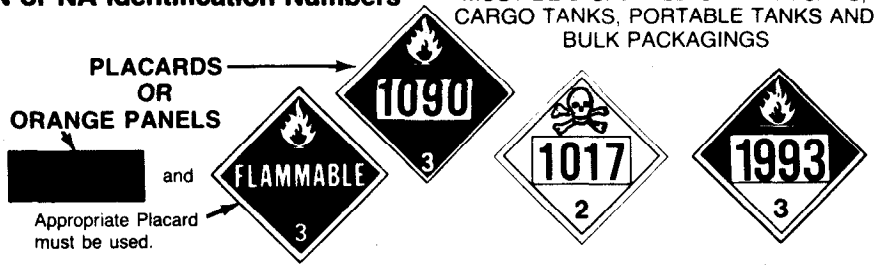

- When hazardous materials are transported in Tank Cars (Section 172.330), Cargo Tanks (Section 172.328), Portable Tanks (Section 172.326) or Bulk Packagings (Section 172.331), UN or NA numbers must be displayed on placards, orange panels or, when authorized, plain white square-on-point configuration.
- UN (United Nations) or NA (North American) numbers are found in the Hazardous Materials Tables, Sections 172.101 and 172.102.
- Identification numbers may not be displayed on "POISON GAS," "RADIOACTIVE," or "EXPLOSIVE A," "EXPLOSIVE B," "BLASTING AGENTS," or "DANGEROUS" placards. (See Section 172.334.)
- In lieu of the orange panel, identification numbers may be placed on plain white square-on-point configuration when there is no placard specified for the hazard class (*e.g.*, ORM-A, B, C, D, or E) or where the identification number may not be displayed on the placard. See Section 172.336(b) for additional provisions and specifications.
- When the identification number is displayed on a placard the UN hazard class number must be displayed in the lower corner of each placard (see Section 172.332 (c)(3)).
- Specifications of size and color of the Orange Panel can be found in Section 172.332(b).
- NA numbers are used only in the USA and Canada.

Additional Placarding Guidelines

A transport vehicle or freight container containing two or more classes of material requiring different placards specified in Table 2 may be placarded DANGEROUS in place of the separate placards specified for each of those classes of material specified in Table 2. However, when 5000 pounds or more of one class of material is loaded therein at one loading facility, the placard specified for that class must be applied. This exception, provided in Section 172.504(b), does not apply to portable tanks, tank cars, or cargo tanks.

CAUTION: Check each shipment for compliance with the appropriate hazardous materials regulations — Proper Classification, Packaging, Marking, Labeling, Placarding, Documentation — prior to offering for shipment.

In an emergency, call Chemtrec, 1-800-424-9300